PLUMBING SPECIFICATIONS

1. GENERAL PROVISIONS

A. INSTALLATION SHALL BE IN STRICT ACCORDANCE WITH THE 2018 VIRGINIA STATE PLUMBING CODE INCLUDING REFERENCED CODES AND STANDARDS AND IN ACCORDANCE WITH MANDATES OF THE LOCAL BUILDING OFFICIALS.

B. THE GENERAL ARRANGEMENT AND LOCATIONS OF PIPING, FIXTURES, ETC. ARE INDICATED BY THE DRAWINGS AND SHALL BE INSTALLED IN ACCORDANCE THEREWITH; WITH THE EXCEPTION OF SUCH CHANGES AS MAY BE REQUIRED ON ACCOUNT OF OTHER TRADES. CONTRACTOR SHALL COORDINATE WORK WITH INSTALLATION OF OTHER SUBCONTRACTORS.

C. PLUMBING WORK SHALL BE COORDINATED WITH THE CONTRACTOR AS TO SCHEDULING, DIMENSIONING AND LOCATION OF EQUIPMENT.

D. MAJOR ITEMS ARE SHOWN ON THE PROJECT PLANS. CONTRACTOR SHALL BE RESPONSIBLE FOR ALL INCIDENTAL ITEMS REQUIRED TO PROVIDE A COMPLETE AND FUNCTIONAL SYSTEM.

E. ALL PIPING SYSTEMS SHALL TERMINATE 5 FEET BEYOND THE BUILDING LINE UNLESS INDICATED OTHERWISE. EXTENSION OF THESE LINES SHALL BE PROVIDED BY THE SITE CONTRACTOR.

F. TRADE NAMES AND CATALOG NUMBERS SHALL BE INTERPRETED AS ESTABLISHING A GENERAL DESIGN AND STANDARD OF QUALITY AND SHALL NOT BE CONSTRUED AS LIMITING COMPETITION. UNLESS STATED OTHERWISE, THE CONTRACTOR MAY USE ANY ARTICLE WHICH, IN HIS JUDGEMENT, AND WITH WRITTEN COMMENT FROM THE ARCHITECT/ENGINEER INDICATING NO OBJECTION, IS EQUAL OR SUPERIOR TO THAT SPECIFIED. DRAWINGS SHOWING CHANGES OR REVISIONS REQUIRED BY THE SUBSTITUTION FOR SPECIFIED ITEMS SHALL BE SUBMITTED WITH THE SHOP DRAWING DATA, AND THE COSTS OF ALL SUCH CHANGES SHALL BE BORNE BY THE CONTRACTOR.

G. SIMILAR ITEMS SHALL BE PROVIDED BY A SINGLE MANUFACTURER.

H. ALL REQUIRED WALL OR FLOOR OPENINGS SHALL BE COORDINATED WITH THE CONTRACTOR.

I. ALL PIPING SHALL BE ABOVE CEILING UNLESS INDICATED OTHERWISE.

J. DO NOT INSTALL PVC PIPING OR ANY COMBUSTIBLE MATERIAL IN ANY AIR PLENUM.

K. ALL EQUIPMENT SHALL BE WIPED CLEAN, REMOVING ALL TRACES OF OIL, DIRT, OR PAINT SPOTS.

L. PROVIDE SUPPORTS TO RIGIDLY ATTACH ALL EQUIPMENT, APPURTENANCES AND PIPE AS REQUIRED FOR SUPPORT. PRIOR TO INSTALLATION OF HANGERS AND INSERTS, THE CONTRACTOR SHALL COORDINATE LOCATIONS AND REQUIREMENTS TO MINIMIZE CONFLICTS WITH OTHER BUILDING SYSTEMS. INSTALLATION OF PIPE HANGERS AND SUPPORTS SHALL BE IN STRICT ACCORDANCE WITH MSS SP-58, 69 AND 89.

M. CONTRACTOR SHALL MAKE FINAL CONNECTIONS TO ALL EQUIPMENT INDICATED TO BE FURNISHED BY OTHERS.

2. SUBMISSION OF SHOP DRAWINGS, PRODUCT DATA, SAMPLES AND PROJECT INFORMATION

A. SHOP DRAWINGS SHALL BE SUBMITTED FOR THE FOLLOWING ITEMS:
(1) PIPING IDENTIFICATION
(2) INSULATION
(3) GAS COCKS
(4) CLEANOUTS
(5) FLOOR DRAINS
(6) GATE VALVES
(7) CHECK VALVES
(8) BACKFLOW PREVENTERS
(9) ALL SCHEDULED EQUIPMENT INDICATED ON SHEET P-2

B. IDENTIFY ALL PLUMBING SHOP DRAWINGS, PRODUCT DATA AND SAMPLES WITH THE NAME OF THE PROJECT. CLEARLY MARK THE SPECIFIC ITEMS INTENDED FOR USE. SUBMIT ALL RELATED ITEMS AT ONE TIME.

C. PRIOR TO SUBSTANTIAL COMPLETION OF THE PROJECT, SUBMIT THE FOLLOWING INFORMATION FOR REVIEW AND APPROVAL.

(1) OPERATING AND MAINTENANCE INSTRUCTIONS.
(2) "AS BUILT" DRAWINGS.

3. GUARANTEE: ALL MATERIALS AND WORKMANSHIP SHALL BE GUARANTEED TO BE FREE FROM DEFECTS FOR A PERIOD OF ONE (1) YEAR FROM DATE OF ACCEPTANCE AND CONTRACTOR SHALL MAKE GOOD, WITHOUT ADDITIONAL COST TO THE OWNER, ANY DEFECTS WHICH MAY APPEAR WITHIN THAT PERIOD. MANUFACTURER'S WARRANTIES EXTENDING BEYOND ONE YEAR SHALL BE PROCESSED AND TURNED OVER TO THE OWNER.

4. "AS BUILT" DRAWINGS: CONTRACTOR SHALL KEEP AN ACCURATE RECORD OF THE LOCATION OF ALL CONCEALED PIPING, VALVES, CONTROLS, ETC., BOTH INTERIOR AND EXTERIOR. ON COMPLETION OF THE WORK, ONE PRINT EACH OF THE CONTRACT DRAWINGS WHICH ARE APPLICABLE SHALL BE NEATLY AND CLEARLY MARKED IN COLOR TO SHOW ALL VARIATIONS BETWEEN THE WORK ACTUALLY PROVIDED AND THAT INDICATED ON THE CONTRACT DRAWINGS.

5. OPERATING AND MAINTENANCE MANUALS

A. GENERAL: PRIOR TO COMPLETION OF THE PROJECT, THE CONTRACTOR SHALL PROVIDE TWO HARDBACKED LOOSELEAF RING TYPE BINDERS, IDENTIFIED WITH THE NAME OF THE PROJECT. CONTRACTOR SHALL DELIVER THESE BINDERS TO THE ENGINEER FOR REVIEW AND TRANSMITTAL TO THE OWNER.

B. THE FOLLOWING ITEMS AND OTHER ADDITIONAL PERTINENT DATA FOR EACH ITEM OF EQUIPMENT SHALL BE INCLUDED:

C. THE OPERATING AND MAINTENANCE MANUALS SHALL BE CONSIDERED A PART OF THE FINAL INSPECTION AND THEY SHALL BE SUBMITTED FOR APPROVAL AT LEAST THIRTY (30) DAYS PRIOR TO REQUEST FOR FINAL INSPECTION.

6. ACCESS DOORS: ACCESS DOORS SHALL BE PROVIDED FOR ALL CONCEALED VALVES, CONTROLS, AND ANY OTHER EQUIPMENT OR MATERIALS REQUIRING INSPECTION OR MAINTENANCE. ACCESS DOORS SHALL BE FURNISHED FOR FLOORS, WALLS AND CEILINGS, OF ADEQUATE SIZE SO THAT CONCEALED ITEMS WILL BE READILY ACCESSIBLE FOR SERVICING OR FOR REMOVAL AND REPLACEMENT IF NECESSARY.

7 . IDENTIFICATION

A. SUBMITTALS
(1) SUBMIT LIST OF WORDING, SYMBOLS, LETTER SIZE, AND COLOR CODING FOR MECHANICAL IDENTIFICATION.
(2) SUBMIT VALVE CHART AND SCHEDULE, INCLUDING VALVE TAG NUMBER, LOCATION, FUNCTION, AND VALVE MANUFACTURER'S NAME AND MODEL NUMBER.
(3) PRODUCT DATA: PROVIDE MANUFACTURERS CATALOG LITERATURE FOR EACH PRODUCT REQUIRED.

B. NAMEPLATES
(1) DESCRIPTION: LAMINATED THREE-LAYER PLASTIC WITH ENGRAVED LETTERS ON LIGHT CONTRASTING BACKGROUND COLOR.

C. TAGS
(1) METAL TAGS: BRASS WITH STAMPED LETTERS; TAG SIZE MINIMUM 1-1/2 INCHES (40 MM) DIAMETER.
(2) CHART: TYPEWRITTEN LETTER SIZE LIST IN ANODIZED ALUMINUM FRAME.

D. INSTALLATION
(1) DEGREASE AND CLEAN SURFACES TO RECEIVE ADHESIVE FOR IDENTIFICATION MATERIALS.
(2) INSTALL PLASTIC NAMEPLATES WITH CORROSIVE-RESISTANT MECHANICAL FASTENERS, OR ADHESIVE. APPLY WITH SUFFICIENT ADHESIVE TO ENSURE PERMANENT ADHESION AND SEAL WITH CLEAR LACQUER.
(3) INSTALL TAGS WITH CORROSION RESISTANT CHAIN.
(4) INSTALL PLASTIC PIPE MARKERS IN ACCORDANCE WITH MANUFACTURER'S INSTRUCTIONS.
(5) IDENTIFY CONTROL PANELS AND MAJOR CONTROL COMPONENTS OUTSIDE PANELS WITH PLASTIC NAMEPLATES.
(6) IDENTIFY VALVES IN MAIN AND BRANCH PIPING WITH TAGS.
(7) IDENTIFY PIPING, CONCEALED OR EXPOSED, WITH PLASTIC PIPE MARKERS OR STENCILLED PAINTING. IDENTIFY SERVICE, FLOW DIRECTION, AND PRESSURE. INSTALL IN CLEAR VIEW AND ALIGN WITH AXIS OF PIPING. LOCATE IDENTIFICATION NOT TO EXCEED 20 FEET (6 M) ON STRAIGHT RUNS INCLUDING RISERS AND DROPS, ADJACENT TO EACH VALVE AND TEE, AT EACH SIDE OF PENETRATION OF STRUCTURE OR ENCLOSURE, AND AT EACH OBSTRUCTION.
(8) PROVIDE CEILING TACKS TO LOCATE VALVES ABOVE T-BAR TYPE PANEL CEILINGS. LOCATE IN CORNER OF PANEL CLOSEST TO EQUIPMENT.

8. PIPING SPECIALTIES

A. PIPE ESCUTCHEONS: INSTALL PIPE ESCUTCHEONS ON EACH PIPE PENETRATION THRU FLOORS, WALLS PARTITIONS, AND CEILINGS WHERE PENETRATION IS EXPOSED TO VIEW AND ON EXTERIOR OF BUILDING. SECURE ESCUTCHEON TO PIPE OR INSULATION SO ESCUTCHEON COVERS PENETRATION HOLE, AND IS FLUSH WITH ADJOINING SURFACE. PROVIDE SHEET STEEL ESCUTCHEONS, SOLID OR SPLIT HINGED. FOR AREAS WHERE WATER AND CONDENSATION CAN BE EXPECTED TO ACCUMULATE, PROVIDE CAST BRASS OR SHEET BRASS ESCUTCHEONS, SOLID OR SPLIT HINGED.

B. PIPE SLEEVES: INSTALL PIPE SLEEVES WHERE PIPING PASSES THROUGH WALLS, FLOORS, CEILINGS, AND ROOFS. DO NOT INSTALL SLEEVES THROUGH STRUCTURAL MEMBERS OF WORK, EXCEPT AS DETAILED ON DRAWINGS, OR AS REVIEWED BY ARCHITECT/ENGINEER. SIZE SLEEVES SO THAT PIPING AND INSULATION (IF ANY) WILL HAVE FREE MOVEMENT IN SLEEVE, INCLUDING ALLOWANCE FOR THERMAL EXPANSION.

C. FIRE BARRIER PENETRATION SEALS: PROVIDE SEALS FOR ANY OPENING THROUGH FIRE-RATED WALLS, FLOORS, OR CEILINGS USED AS PASSAGE FOR PLUMBING COMPONENTS SUCH AS PIPING. INSTALLATION SHALL BE AS RECOMMENDED BY THE MANUFACTURER. SEALS SHALL BE EQUAL TO ONE OF THE FOLLOWING:

(1) DOW-CORNING FIRESTOP SYSTEM PENETRATION SEALS INCLUDING FIRE STOP SEALANT AND FIRE STOP FOAM.

(2) 3M BRAND "FIRE BARRIER WRAP/STRIP" NO. FS-195, FIRE BARRIER CAULK, CP-25 AND PUTTY NO. 303 SHALL BE USED WHERE PVC, POLYPROPYLENE OR OTHER NON-METALLIC PIPES PASS THROUGH FLOORS AND FIRE RATED WALLS.

9. INSULATION

A. FLAME/SMOKE RATINGS: PROVIDE COMPOSITE PLUMBING INSULATION (INSULATION, JACKETS, COVERINGS, SEALERS, MASTICS AND ADHESIVES) WITH FLAME-SPREAD RATING OF 25 OR LESS, AND SMOKE-DEVELOPED RATING OF 50 OR LESS, AS TESTED BY ANSI/ASTM E84 (NFPA 255) METHOD. INSULATION SHALL BE LABELED BY THE MANUFACTURER. THE LABEL SHALL INDICATE THE INSULATING VALUE, FLAME SPREAD AND SMOKE-DEVELOPED RATING.

B. SUBMITTALS: SUBMIT MANUFACTURER'S SPECIFICATIONS AND INSTALLATION INSTRUCTIONS FOR EACH TYPE OF PLUMBING INSULATION. SUBMIT SCHEDULE SHOWING MANUFACTURER'S PRODUCT NUMBER, THICKNESS, AND FURNISHED ACCESSORIES FOR EACH PLUMBING SYSTEM REQUIRING INSULATION.

C. INSTALLATION: INSULATION SHALL BE APPLIED IN ACCORDANCE WITH MANUFACTURER'S RECOMMENDATIONS USING ONLY ADHESIVES, MASTICS AND PLUMBING FASTENERS APPROVED BY THE INSULATION MANUFACTURER. INSULATION SHALL NOT BE APPLIED UNTIL AFTER THE EQUIPMENT HAS BEEN TESTED WITH RESULTS ACCEPTABLE TO THE ARCHITECT/ENGINEER.

D. MATERIALS:

(1) CELLULAR FOAM PIPE INSULATION: TUBULAR, FLEXIBLE, FIRE RESISTANT INSULATION WITH OPERATING TEMPERATURE RANGE OF -40 DEGREES F TO 220 DEGREES F, THERMAL CONDUCTIVITY "K"=0.27 BTU-IN/HOUR-SF-DEG F AT 75 DEGREES F. NO JACKET REQUIRED. EQUAL TO ARMSTRONG ARMAFLEX AP.

E. PIPE INSULATION

(1) INSULATION OMITTED: OMIT INSULATION ON EXPOSED PLUMBING FIXTURE RUNOUTS FROM FACES OF WALL OR FLOOR TO FIXTURE; ON UNIONS, FLANGES, STRAINERS, FLEXIBLE CONNECTIONS, AND EXPANSION JOINTS.

(2) COVER VALVES, FITTINGS AND SIMILAR ITEMS IN EACH PIPING SYSTEM WITH EQUIVALENT THICKNESS AND COMPOSITION OF INSULATION AS APPLIED TO ADJOINING PIPE RUN.

(3) EXTEND PIPING INSULATION WITHOUT INTERRUPTION THROUGH WALLS, FLOORS AND SIMILAR PIPING PENETRATIONS, EXCEPT WHERE OTHERWISE INDICATED.

(4) INSTALL PROTECTIVE METAL SHIELDS AND INSULATED INSERTS WHEREVER NEEDED TO PREVENT COMPRESSION OF INSULATION.

(5) DOMESTIC COLD WATER PIPING, ABOVE GROUND: PIPING SHALL BE INSULATED WITH 1/2 INCH THICK GLASS FIBER, CELLULAR FOAM, OR POLYETHYLENE PIPE INSULATION.

(6) DOMESTIC HOT WATER PIPING (INCLUDING HOT WATER RECIRCULATING): PIPING SHALL BE INSULATED WITH 1 INCH THICK GLASS FIBER, CELLULAR FOAM, OR POLYETHYLENE PIPE INSULATION. VAPOR SEAL IS NOT REQUIRED.

10. PLUMBING PIPING

A. DOMESTIC WATER PIPING ABOVE GROUND

PIPE: TYPE L HARD DRAWN COPPER IN ACCORDANCE WITH ASTM B75
PEX IN ACCORDANCE WITH ASTM F1281 OR CPVC IN ACCORDANCE ACCORDANCE WITH ASTM D2846
FITTINGS: CAST BRONZE OR WROUGHT COPPER ASTM B16.15, PEX, CPVC
JOINTS: SOLDERED USING TIN-ANTIMONY (95-5) SOLDER

B. DOMESTIC WATER PIPING UNDERGROUND

PIPE: TYPE K SEAMLESS ROLL STOCK
FITTINGS: CAST BRONZE OR WROUGHT COPPER
JOINTS: SOLDERED USING TIN-ANTIMONY (95-5) SOLDER

C. SOIL, WASTE AND VENT PIPING BELOW GRADE AND STORM SEWER BELOW GRADE

SIZE: ALL
PIPE: SCH. 40 PVC-DWV ASTM D-2665
FITTINGS: PVC SOCKET FITTINGS (DWV)
JOINTS: SOLVENT CEMENT JOINTS

D. SOIL, WASTE AND VENT PIPING ABOVE GRADE AND STORM DRAINS & ROOF LEADERS

SIZE: ALL
PIPE: SCH. 40 PVC-DWV ASTM D-2665
FITTINGS: PVC SOCKET FITTINGS (DWV)
JOINTS: SOLVENT CEMENT JOINTS

E. ALL PIPE OF THE SAME SIZE SHALL BE THE SAME MATERIAL.

F. SLOPE ALL DRAIN LINES 1/4 INCH PER FOOT MINIMUM FOR SIZES LESS THAN 4 INCHES; SLOPE 1/8 INCH PER FOOT FOR SIZES 4 INCHES AND LARGER.

G. SOIL, WASTE AND VENT PIPING LOCATED BELOW GRADE SHALL BE MINIMUM 2 INCHES SIZE.

H. VENTS SHALL EXTEND 12 INCHES ABOVE THE ROOF. ROOF FLASHING SHALL BE COORDINATED WITH BY THE CONTRACTOR.

I. DOMESTIC HOT AND COLD WATER PIPING SHALL BE 1/2 INCHES SIZE UNLESS INDICATED OTHERWISE.

11. NATURAL GAS SYSTEMS

A. GAS SERVICE PIPING:

(1) ALL SIZES: SCHEDULE 40 BLACK STEEL PIPE, ASTM A120/A53-CW OR ASTM/A53 GRADE B (WELDED OR SEAMLESS); WROUGHT STEEL BUTTWELDING FITTINGS.

(2) WRAPPING FOR EXPOSED PIPING: MACHINE WRAP PIPE USING 50% OVERLAP WRAP, WITH POLYVINYL CHLORIDE TAPE. HAND WRAP FITTINGS USING 100% OVERLAP WRAP EXTENDING 6 INCHES BEYOND FITTING ONTO WRAPPED PIPE. COMPLY WITH TAPE MANUFACTURER'S INSTALLATION INSTRUCTIONS.

B. BUILDING DISTRIBUTION PIPING AND VENT PIPING:

(1) ALL SIZES: SCHEDULE 40 BLACK STEEL PIPE, ASTM A120/A53-CW OR ASTM/A53 GRADE B (WELDED OR SEAMLESS); MALLEABLE IRON THREADED FITTINGS (EXPOSED PIPING ONLY); WROUGHT STEEL BUTTWELDING FITTINGS (CONCEALED AND EXPOSED PIPING). OUTDOOR PIPING TO BE PAINTED WITH EXTERIOR GRADE ENAMEL PAINT, COLOR AS DETERMINED BY THE ARCHITECT.

C. GAS COCKS:

(1) GAS COCKS 2 INCHES AND SMALLER: 150 PSI NON-SHOCK WOG, BRONZE STRAIGHTWAY COCK, FLAT OR SQUARE HEAD, THREADED ENDS.

(2) GAS COCKS 2-1/2 INCHES AND LARGER: 125 PSI NON-SHOCK WOG, IRON BODY BRONZE MOUNTED, STRAIGHTWAY COCK, SQUARE HEAD, FLANGED ENDS.

D. ALL GAS PIPING EQUIPMENT CONNECTIONS SHALL BE PROVIDED WITH A 6 INCHES DIRT TRAP, UNION AND GAS COCK SHUT OFF.

E. ALL JOINTS SHALL BE SEALED WITH CHEMICALLY RESISTANT SEALER APPLIED TO MALE THREADS OF PIPE CONNECTION.

F. GAS PIPING SHALL BE INSTALLED WITH A 1/64 INCH PER FOOT DOWNWARD SLOPE IN DIRECTION OF FLOW.

G. PIPING, FABRICATED SUPPORTS, OR OTHER UNFINISHED AND UNPROTECTED MATERIALS LOCATED OUTDOORS SHALL BE PAINTED WITH A SUITABLE PRIMER AND COMPATIBLE FINISH PAINT. COLOR SHALL BE AS DIRECTED BY ENGINEER.

12. CLEANOUTS

A. CLEANOUTS SHALL BE THE SAME SIZE AS LINE SERVED, BUT NOT LARGER THAN 4 INCHES, AND SHALL BE PROVIDED AT THE BASE OF EACH SOIL AND WASTE STACK, AT ALL POINTS WHERE DIRECTION CHANGE IS MORE THAN 45 DEGREES, AT MINIMUM INTERVALS OF 50 FEET FOR 4 INCHES AND SMALLER PIPING, AT MINIMUM INTERVALS OF 100 FEET FOR PIPING LARGER THAN 4 INCHES, AS REQUIRED BY CODE AND AS INDICATED ON THE DRAWINGS. COVERS SHALL BE SET FLUSH WITH FLOOR OR WALL.

13. FLOOR DRAINS

A. PROVIDE FLOOR DRAINS OF SIZE AND TYPE AS INDICATED ON DRAWINGS. ALL DRAINS CONNECTING TO SANITARY SEWER SYSTEM SHALL BE FURNISHED WITH P-TRAP. DRAINS SHALL HAVE OUTLET COMPATIBLE WITH PIPING SYSTEM TO WHICH IT IS CONNECTED.

B. INSTALL FLOOR DRAINS IN ACCORDANCE WITH MANUFACTURER'S INSTRUCTIONS. PROVIDE FLOOR DRAINS WHERE INDICATED ON DRAWINGS AND AT LOW POINTS OF SURFACE AREAS TO BE DRAINED.

14. PLUMBING VALVES

A. PROVIDE SHUT-OFF VALVE AND UNION OR EQUIVALENT AT EACH HOT AND COLD WATER EQUIPMENT CONNECTION. PROVIDE SHUT-OFF VALVE ON EACH BRANCH OR RISER THAT SERVES TWO OR MORE PLUMBING FIXTURES.

B. GATE VALVES 2-1/2 INCHES AND SMALLER: ALL BRONZE, RISING STEM, SOLID WEDGE DISC. STOCKHAM B-100 OR B-108.

C. CHECK VALVES IN HORIZONTAL PIPES:

(1) 2 INCHES AND SMALLER: ALL BRONZE, REGRINDING BRONZE DISC, HORIZONTAL SWING, Y-PATTERN. STOCKHAM B-319OR B-309.

D. CHECK VALVES IN VERTICAL PIPES AND PUMP DISCHARGE: SILENT CHECK VALVE WITH SEMI-STEEL BODY, BRONZE TRIM AND STAINLESS STEEL SPRING. METRAFLEX 700 SERIES.

E. BALL VALVES MAY BE USED IN LIEU OF GATE VALVES 2 INCHES AND SMALLER. BALL VALVES SHALL HAVE BRONZE BODY, BRONZE BALL AND TFE SEATS AND SEALS. STOCKHAM S-216BRRT OR S-216BRRS.

15. WATER HEATERS

A. UL AND NEMA COMPLIANCE: PROVIDE ELECTRIC COMPONENTS REQUIRED AS PART OF PLUMBING EQUIPMENT, WHICH HAVE BEEN LISTED AND LABELED BY UNDERWRITER'S LABORATORIES AND COMPLY WITH NEMA STANDARDS.

B. NEC COMPLIANCE: COMPLY WITH NATIONAL ELECTRICAL CODE (ANSI/NFPA 70) AS APPLICABLE TO INSTALLATION AND ELECTRICAL CONNECTIONS OF ANCILLARY ELECTRICAL COMPONENTS OF PLUMBING EQUIPMENT.

C. WATER HEATERS SHALL BE FURNISHED WITH ASME RATED TEMPERATURE AND PRESSURE RELIEF VALVE WITH TEST LEVER.

16. PLUMBING FIXTURES

A. CODES AND STANDARDS: COMPLY WITH APPLICABLE PORTIONS OF NATIONAL STANDARD PLUMBING CODE PERTAINING TO MATERIALS AND INSTALLATION OF PLUMBING FIXTURES.

(1) ANSI STANDARDS: COMPLY WITH APPLICABLE ANSI STANDARDS PERTAINING TO PLUMBING FIXTURES AND SYSTEMS.

(2) PDI COMPLIANCE: COMPLY WITH STANDARDS ESTABLISHED BY PDI PERTAINING TO PLUMBING FIXTURE SUPPORTS.

(3) UL COMPLIANCE: CONSTRUCT WATER COOLERS IN ACCORDANCE WITH UL STANDARD 399 "DRINKING-WATER COOLERS", AND PROVIDE UL-LISTING AND LABEL.

(4) ANSI COMPLIANCE: CONSTRUCT AND INSTALL BARRIER FREE PLUMBING FIXTURES IN ACCORDANCE WITH ANSI STANDARD A117.1 "SPECIFICATIONS FOR MAKING BUILDINGS AND FACILITIES ACCESSIBLE TO AND USABLE BY PHYSICALLY HANDICAPPED PEOPLE".

B. ALL EXPOSED FIXTURE SUPPLIES AND WASTE LINES SHALL BE CHROME PLATED.

C. PLUMBING FIXTURES SHALL BE POSITIVELY VENTED AND TRAPPED IN ACCORDANCE WITH THE BOCA PLUMBING CODE, LATEST EDITION. WET VENTING IS ALLOWED IF WASTE PIPING IS OVERSIZED AND IN ACCORDANCE WITH CODE PROVISIONS. LOCATION OF VENT SHALL NOT EXCEED MAXIMUM DISTANCES TO THE TRAP AS ESTABLISHED WITHIN THE BOCA PLUMBING CODE.

17. CLEANING AND TESTING

A. ALL WATER PIPING, VALVES, ETC. SHALL BE THOROUGHLY FLUSHED OF FOREIGN MATTER AND TESTED FOR LEAKS FOR A PERIOD OF TWO HOURS AT NOT LESS THAN 25 PSIG. ANY LEAKAGE SHALL BE REPAIRED. DISINFECT DOMESTIC WATER PIPING INCLUDING WATER SERVICE PIPING IN ACCORDANCE WITH AWWA C601.

B. ALL DRAIN, WASTE AND VENT PIPING SHALL BE TESTED FOR LEAKS BY FILLING PIPING SYSTEM TO OVERFLOW AND ALLOWING TO STAND FOR 24 HOURS. NO VISIBLE DROP IN WATER LEVEL WILL BE ACCEPTABLE.

END OF SPECIFICATIONS

DRAWING LIST

P-1	PLUMBING SPECIFICATIONS
P-2	PLUMBING SCHEDULES
P-3	PLUMBING FLOOR PLAN
P-4	GAS PIPING FLOOR PLAN

S. HOYT WILLIAMS PE, LLC
10714 ROCK ARBOR WAY,
KNOXVILLE TN. 37922
423 914 5601
MECHANICAL ELECTRICAL & PLUMBING ENGINEERING
SHWILLIAMSPE@GMAIL.COM

COMMONWEALTH OF VIRGINIA
MELINDA D. RUBLE
No. 028163
05.17.2024
PROFESSIONAL ENGINEER

No.	Date	Revision
	03.29.24	95% REVIEW SET
	05.17.24	PERMIT & BID SET

MOUNT RODGERS PLACE
BRISTOL, VIRGINIA
180 Bristol East Road - Bristol, Virginia 24201

PLUMBING SPECIFICATIONS

Date 03.29.24
Scale AS INDICATED
Designed By
Drawn By
Checked By
Project Number
Sheet P-1

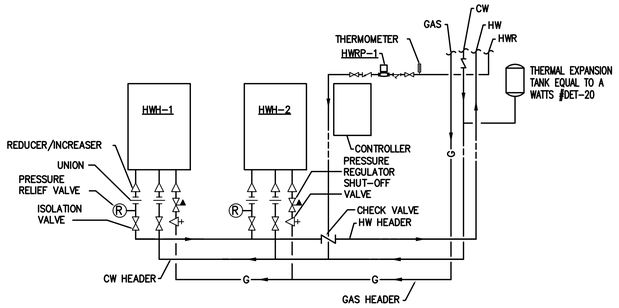

WATER HEATER DETAIL

NO SCALE

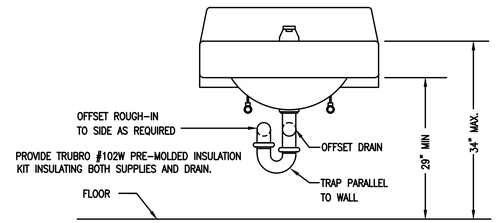

DETAIL – HANDICAP LAVATORY L-1

NO SCALE

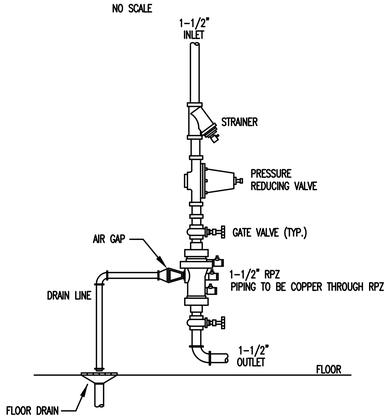

WATER SERVICE ENTRANCE DETAIL

NO SCALE

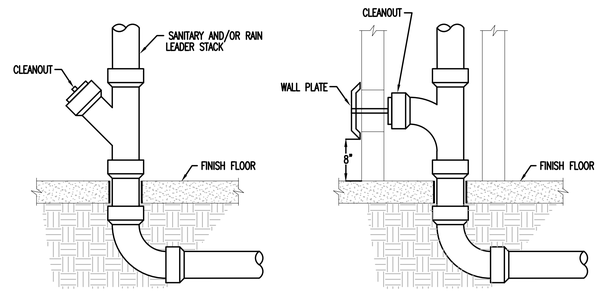

EXPOSED LOCATIONS

CONCEALED LOCATIONS

DETAIL–CLEANOUT @ STACK

NO SCALE

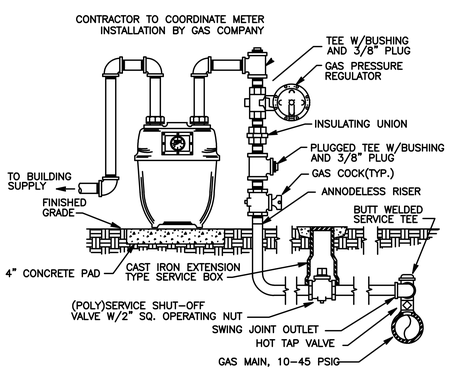

TYPICAL GAS SERVICE CONNECTION DETAIL

N.T.S.

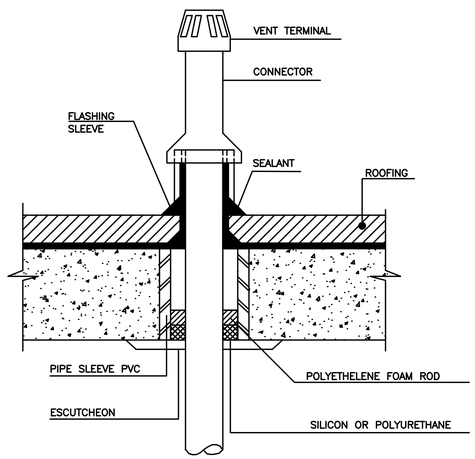

ROOF VENT AND CAP

N.T.S.

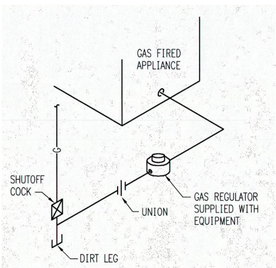

TYPICAL GAS CONNECTION

SCHEMATIC

PLUMBING EQUIPMENT SCHEDULE

WC-1	KOHLER K-3611 HIGHLINE ELONGATED VITREOUS CHINA WATER CLOSET (HANDICAPPED), TANK TYPE, FLOOR MTD., 1.6 GAL/FLUSH CLASS FIVE FLUSHING TECHNOLOGY; KOHLER K-4650 ELONGATED SEAT; BOLT CAPS.
L-1	AMERICAN STANDARD 9024.911EC DECORUM, VITREOUS CHINA; DELTA FAUCET MODEL NO. B501LF WITH WHEELCHAIR OFFSET, GRID STRAINER, AND ANGLE SUPPLIES WITH LOOSE KEY STOPS. PROVIDE JAY R SMITH 0801 CARRIER. PROVIDE THERMOSTATIC MIXING VALVE, WILKINS MODEL ZW1070, ASSE 1070 COMPLIANT
L-2	AMERICAN STANDARD 9024.911EC DECORUM, VITREOUS CHINA; DELTA FAUCET MODEL NO. B501LF WITH WHEELCHAIR OFFSET, SPEAKMAN VS-2272-E15 HAND SHOWER WITH QUICK CONNECT, GRID STRAINER, AND ANGLE SUPPLIES WITH LOOSE KEY STOPS. PROVIDE JAY R SMITH 0801 CARRIER. PROVIDE THERMOSTATIC MIXING VALVE, WILKINS MODEL ZW1070, ASSE 1070 COMPLIANT
S-1	ELKAY LR1720C STAINLESS STEEL SINGLE BOWL SINK, 18 GA, 8" DEEP FOR DROP-IN INSTALLATION WITH LK406GN0474C FAUCET; CHROME P-TRAP AND SUPPLIES.
S-2	ELKAYWCL19230SDC STAINLESS STEEL WALL MOUNT SINK, 18 GA, 9" DEEP WITH LK2325BH5C FAUCET; CHROME P-TRAP AND SUPPLIES.
S-3	ELKAY LRAD291865PD STAINLESS STEEL DOUBLE BOWL SINK, 18 GA, 6.5" DEEP FOR DROP-IN INSTALLATION WITH DELTA 9113-DST PULL DOWN FAUCET; CHROME P-TRAP AND SUPPLIES.
S-4	ELKAY LR1720C STAINLESS STEEL SINGLE BOWL SINK, 18 GA, 8" DEEP FOR DROP-IN INSTALLATION WITH LK406GN0474C FAUCET, GUARDIAN G1200 FAUCET MOUNT EYE WASH; CHROME P-TRAP AND SUPPLIES.
JS-1	FIAT #TSBC6011 TERRAZZO MOP SERVICE BASIN, 32"x32"x12"; #830-AA WALL MTD FAUCET W/VACUUM BREAKER & BUCKET HOOK; #832-AA HOSE & BRACKET, #E-77-AA VINYL BUMPER GUARD. #989-CC MOP HANGER & #QDC-3-2 QUICK DRAIN CONNECTOR, #MSG2424 STAINLESS STEEL WALL GUARDS.
HB-1	CHICAGO FAUCETS 293-CP INSIDE SILL FITTING, POLISHED CHROME PLATED FINISH, SOLID BRASS BODY CONSTRUCTION, 2-1/4" TEE HANDLE, 1/2" NPT FEMALE INLET, 3/4" MALE GARDEN HOSE THREAD OUTLET, SLOW COMPRESSION RENEWABLE CARTRIDGE; SPEAKMAN VS-2272-E15 HAND SHOWER WITH QUICK CONNECT
FD-1	JOSAM #30000-SA-2-17 FLOOR DRAIN, SATIN FINISH BRONZE TOP, NON-CLOG STRAINER, SECURED GRATE; 4"DEEP SEAL TRAP; PROSET TRAP GUARD. SET RIM FLUSH WITH FINISH FLOOR.
CO	JOSAM CLEANOUT FLOOR — ROUND, SATIN BRONZE TOP, RECESSED PLUG. WALL — CHROME FLUSH WALL PLATE, RECESSED PLUG.
RPZ	WATTS #909 REDUCED PRESSURE ZONE BACKFLOW PREVENTOR, BRONZE CONSTRUCTION, EPOXY COATED CAST IRON CHECK VALVE BODY WITH BRONZE SEATS, FDA APPROVED EPOXY COATED CAST IRON RELIEF VALVE WITH TRIM. ASSEMBLY TO BE SUITABLE FOR VERTICAL INSTALLATION.
PRV	WATTS 25AUB WATER PRESSURE REDUCING VALVE, BRONZE CONSTRUCTION, WITH INTEGRAL STRAINER AND BUILT-IN BYPASS.
HWH-1, HWH-2	RINNAI GAS FIRED TANKLESS WATER HEATER, 6 GPM CAPACITY AT 65 DEGREE RISE, 199.9 MBH INPUT, 120V/1ø
HWRP-1	BELL & GOSSET #100 CIRCULATING PUMP, 1/12 HP., 120 VOLT, 15 GPM AT 7 FT. HEAD, BRONZE TOP.
WMB	SIOUX CHIEF OX BOX, SERIES 696, ABS BOX WITH CENTER DRAIN, TWO WATER VALVES AND WATER HAMMER ARRESTORS. PROVIDE FLANGED BOX SUITABLE FOR DRYWALL INSTALLATION.
WH-1	JOSAM #71050-74-72 WALL HYDRANT, NON FREEZE, CAST BRONZE W/ INTEGRAL VACUUM BREAKER; UNION ELBOW ASSEMBLY AND WALL CLAMP. NOTE: ALL SUPPLY PIPING SHALL BE CONCEALED IN AN APPROVED MANNER.

PLUMBING FIXTURE INSTALLATION SCHEDULE

FIXTURE	MARK	MH	CW	HW	VENT	WASTE
WATER CLOSET(HC)	WC-1	17"	3/4"	--	2"	4"
LAVATORY	L-1	34"	1/2"	1/2"	1-1/2"	2"
LAVATORY	L-2	34"	1/2"	1/2"	1-1/2"	2"
SINK	S-1	COUNTER	1/2"	1/2"	1-1/2"	2"
SINK	S-2	34"	1/2"	1/2"	1-1/2"	2"
SINK	S-3	COUNTER	1/2"	1/2"	1-1/2"	2"
SINK	S-4	COUNTER	1/2"	1/2"	1-1/2"	2"
JANITOR SINK	JS-1	FLOOR	1/2"	1/2"	1-1/2"	2"

NOTES

1. SIZE GIVEN ARE FOR FIXTURE ONLY. EXCEPTIONS, IF ANY, ARE SHOWN ON PLANS.
2. MOUNTING HEIGHT DIMENSIONS ARE TO FLOOD LEVEL RIM OF FIXTURE, UNLESS NOTED OTHERWISE.
3. THERMOSTATIC MIXING VALVE TO BE MOUNTED HIGH UNDER LAVATORY TO CONCEAL FROM VIEW.

LEGEND

- BRANCH CONNECTION – BOTTOM OF MAIN
- BRANCH CONNECTION – SIDE OF MAIN
- BRANCH CONNECTION – TOP OF MAIN
- PIPE DOWN OR PIPE FROM BELOW
- PIPE UP OR PIPE FROM ABOVE
- DIRECTION OF FLOW
- DOMESTIC COLD WATER
- DOMESTIC HOT WATER
- SANITARY SEWER OR DRAIN
- SANITARY VENT
- CO — CLEANOUT FLUSH WITH FLOOR
- GATE VALVE
- THERMOMETER
- RELIEF VALVE
- FLOOR DRAIN

ABBREVIATIONS

ABV	ABOVE
BTU	BRITISH THERMAL UNIT
BEL	BELOW
BET	BETWEEN
CLG	CEILING
CO	CLEANOUT
CONN	CONNECT, CONNECTION
CW	COLD WATER
CONT	CONTINUED
DN	DOWN
EA	EACH
EWC	ELECTRIC WATER COOLER
F	DEGREES FARENHEIT
FD	FLOOR DRAIN
FL	FLOOR
FR	FROM
FT	FEET
GPM	GALLONS PER MINUTE
HW	HOT WATER
IN	INCH, INCHES
MAX	MAXIMUM
MIN	MINUMUM
REQD	REQUIRED
TEMP	TEMPERATURE
TYP	TYPICAL
V	SANITARY VENT
VTR	VENT THRU ROOF
W	SANITARY WASTE
WH	WALL HYDRANT

S. HOYT WILLIAMS PE, LLC
10714 ROCK ARBOR WAY, KNOXVILLE TN. 37922
423 914 5601
MECHANICAL ELECTRICAL & PLUMBING ENGINEERING
SHWILLIAMSPE@GMAIL.COM

COMMONWEALTH OF VIRGINIA
MELINDA D. RUBLE
No. 028163
05.17.2024
PROFESSIONAL ENGINEER

No.	Date	Revision
	03.29.24	95% REVIEW SET
	05.17.24	PERMIT & BID SET

MOUNT RODGERS PLACE
BRISTOL, VIRGINIA
180 Bristol East Road - Bristol, Virginia 24201

PLUMBING SCHEDULES

Date 03.29.24
Scale AS INDICATED
Designed By
Drawn By
Checked By
Project Number
Sheet P-2

DEMOLITION NOTES:

1. CONTRACTOR TO LOCATE UNDERGROUND SANITARY BEGINNING WITH IDENTIFIED FLOOR PENETRATIONS AND REPORTED BUILDING EXIT AS SHOWN VERIFY EXISTING LINE INTEGRITY AND RECORD ALL FINDINGS ON FIELD DRAWINGS.
2. CONTRACTOR MAY UTILIZE EXISTING SANITARY PIPE IF IT MEETS CODE SIZING AND IS TESTED FOR TIGHTNESS. MAINTAIN A RECORD OF THE LOCATION AND SIZE OF ALL PIPING USED. CAP AND SEAL ALL UNUSED FLOOR PENETRATIONS. RECORD ALL EXISTING FLOOR DRAINS ON THE FIELD PLANS. LIFT NEW FLOOR DRAINS TO NEW FLOOR ELEVATION AND PROVIDE NEW FLOOR DRAIN.
3. REMOVE ALL EXISTING WATER AND GAS PIPING.
4. ALL NEW WATER PIPING IS TO BE INSTALLED BELOW THE ROOF JOISTS.

NOTES:

1. INSTALL NEW PLUMBING FIXTURE IN PLACE OF EXISTING FIXTURE. CONNECT TO EXISTING SANITARY AND VENT PIPING. CONNECT TO NEW DOMESTIC WATER PIPING AS INDICATED. PROVIDE ALL PIPING, FITTINGS, VALVES, APPURTENANCES, ETC AS REQUIRED FOR AN OPERABLE FIXTURE.
2. INSTALL NEW PLUMBING FIXTURE. CONNECT TO EXISTING PLUMBING SANITARY AND VENT PIPING IN THIS AREA. CONTRACTOR TO FIELD VERIFY LOCATION. CONNECT TO NEW DOMESTIC WATER PIPING AS INDICATED. PROVIDE ALL PIPING, FITTINGS, VALVES, APPURTENANCES, ETC AS REQUIRED FOR AN OPERABLE FIXTURE.
3. ENTIRE EXISTING FLOOR SLAB TO BE RAISED 1-1/2" WITH FLOOR LEVELER. ADJUST ALL EXISTING AND NEW FLOOR DRAINS TO FINAL FINISH FLOOR HEIGHT.
4. OWNER HAS INSTALLED WATER AND SEWER PIPING TO SITE TRAILER. OWNER TO BE RESPONSIBLE FOR ALL WATER AND SEWER PIPING INSIDE THE TRAILER.

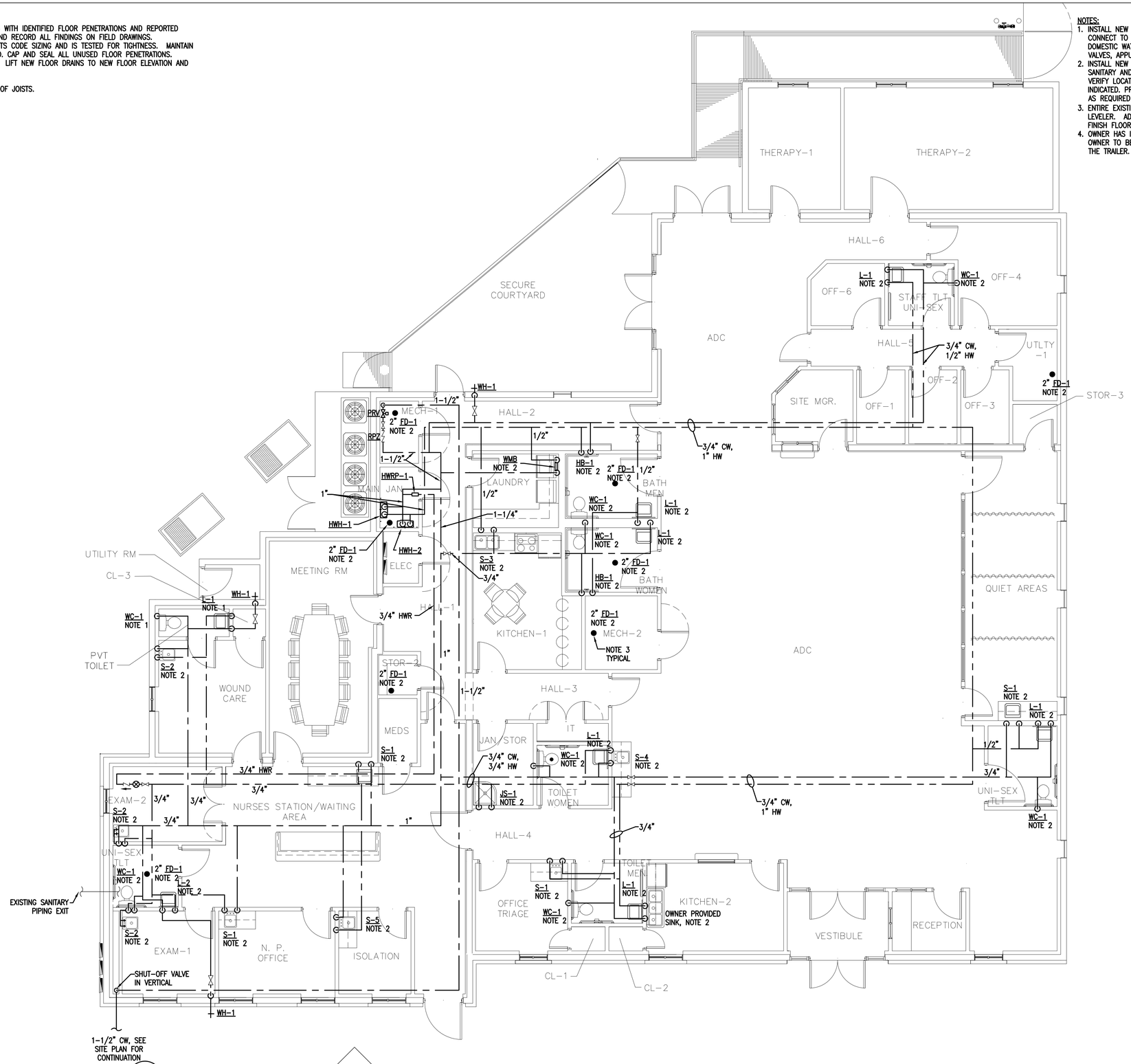

1 PLUMBING FLOOR PLAN
P-3 | P-3
0' 2' 4' 8'
7,495 SF

S. HOYT WILLIAMS PE, LLC
10714 ROCK ARBOR WAY, KNOXVILLE TN. 37922
423 914 5601
MECHANICAL ELECTRICAL & PLUMBING ENGINEERING
SHWILLIAMSPE@GMAIL.COM

COMMONWEALTH OF VIRGINIA
MELINDA D. RUBLE
No. 028163
05.17.2024
PROFESSIONAL ENGINEER

No.	Date	Revision
	03.29.24	95% REVIEW SET
	05.17.24	PERMIT & BID SET

MOUNT RODGERS PLACE
BRISTOL, VIRGINIA
180 Bristol East Road - Bristol, Virginia 24201

PLUMBING FLOOR PLAN

Date 03.29.24
Scale AS INDICATED
Designed By
Drawn By
Checked By
Project Number
Sheet **P-3**

NOTES:
1. ALL HORIZONTAL GAS PIPING SHALL BE INSTALLED ABOVE THE CEILING.
2. SEE SITE DRAWING FOR INSTALLATION OF UNDERGROUND PIPING.

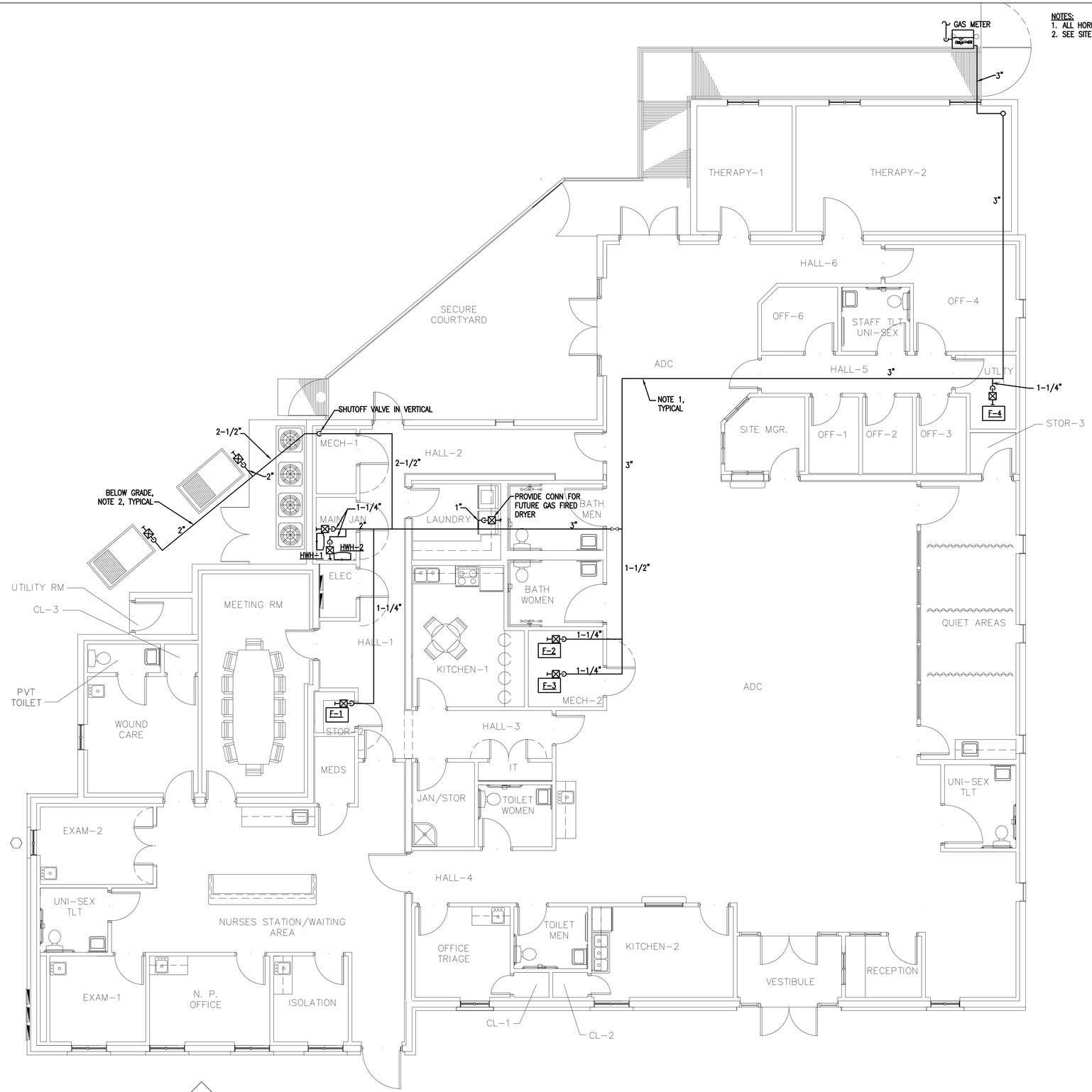

1 P-4 | P-4 GAS PIPING FLOOR PLAN
0' 2' 4' 8'
7,495 SF

S. HOYT WILLIAMS PE, LLC
10714 ROCK ARBOR WAY, KNOXVILLE TN. 37922
423 914 5601
MECHANICAL ELECTRICAL & PLUMBING ENGINEERING
SHWILLIAMSPE@GMAIL.COM

COMMONWEALTH OF VIRGINIA
MELINDA D. RUBLE
No. 028163
05.17.2024
PROFESSIONAL ENGINEER

No.	Date	Revision
	03.29.24	95% REVIEW SET
	05.17.24	PERMIT & BID SET

MOUNT RODGERS PLACE
BRISTOL, VIRGINIA
180 Bristol East Road - Bristol, Virginia 24201

GAS PIPING FLOOR PLAN

Date 03.29.24
Scale AS INDICATED
Designed By
Drawn By
Checked By
Project Number
Sheet P-4

1. GENERAL PROVISIONS

A. INSTALLATION SHALL BE IN STRICT ACCORDANCE WITH THE 2018 VIRGINIA STATE BUILDING CODE INCLUDING REFERENCED CODES AND STANDARDS AND IN ACCORDANCE WITH MANDATES OF THE LOCAL BUILDING OFFICIALS.

B. THE GENERAL ARRANGEMENT AND LOCATIONS OF DUCTWORK, PIPING, FIXTURES, ETC. ARE INDICATED BY THE DRAWINGS AND SHALL BE INSTALLED IN ACCORDANCE THEREWITH; WITH THE EXCEPTION OF SUCH CHANGES AS MAY BE REQUIRED ON ACCOUNT OF OTHER TRADES. CONTRACTOR SHALL COORDINATE WORK WITH INSTALLATION OF OTHER SUBCONTRACTORS.

C. MECHANICAL WORK SHALL BE COORDINATED WITH THE CONTRACTOR AS TO SCHEDULING, DIMENSIONING AND LOCATION OF EQUIPMENT.

D. MAJOR ITEMS ARE SHOWN ON THE PROJECT PLANS. CONTRACTOR SHALL BE RESPONSIBLE FOR ALL INCIDENTAL ITEMS REQUIRED TO PROVIDE A COMPLETE AND FUNCTIONAL SYSTEM.

E. TRADE NAMES AND CATALOG NUMBERS SHALL BE INTERPRETED AS ESTABLISHING A GENERAL DESIGN AND STANDARD OF QUALITY AND SHALL NOT BE CONSTRUED AS LIMITING COMPETITION. UNLESS STATED OTHERWISE, THE CONTRACTOR MAY USE ANY ARTICLE WHICH, IN HIS JUDGEMENT, AND WITH WRITTEN COMMENT FROM THE ARCHITECT/ENGINEER INDICATING NO OBJECTION, IS EQUAL OR SUPERIOR TO THAT SPECIFIED. DRAWINGS SHOWING CHANGES OR REVISIONS REQUIRED BY THE SUBSTITUTION FOR SPECIFIED ITEMS SHALL BE SUBMITTED WITH THE SHOP DRAWING DATA, AND THE COSTS OF ALL SUCH CHANGES SHALL BE BORNE BY THE CONTRACTOR.

F. SIMILAR ITEMS SHALL BE PROVIDED BY A SINGLE MANUFACTURER.

G. ALL REQUIRED WALL OR FLOOR OPENINGS SHALL BE COORDINATED WITH THE CONTRACTOR.

H. ALL PIPING SHALL BE ABOVE CEILING UNLESS INDICATED OTHERWISE.

I. DO NOT INSTALL PVC PIPING OR ANY COMBUSTIBLE MATERIAL IN ANY AIR PLENUM.

J. ALL EQUIPMENT SHALL BE WIPED CLEAN, REMOVING ALL TRACES OF OIL, DIRT, OR PAINT SPOTS.

K. PROVIDE SUPPORTS TO RIGIDLY ATTACH ALL EQUIPMENT, APPURTENANCES AND PIPE AS REQUIRED FOR SUPPORT. PRIOR TO INSTALLATION OF HANGERS AND INSERTS, THE CONTRACTOR SHALL COORDINATE LOCATIONS AND REQUIREMENTS TO MINIMIZE CONFLICTS WITH OTHER BUILDING SYSTEMS. INSTALLATION OF PIPE HANGERS AND SUPPORTS SHALL BE IN STRICT ACCORDANCE WITH MSS SP-58, 69 AND 89.

L. CONTRACTOR SHALL MAKE FINAL CONNECTIONS TO ALL EQUIPMENT INDICATED TO BE FURNISHED BY OTHERS.

M. ALL MATERIALS AND WORKMANSHIP SHALL BE WARRANTED TO BE FREE FROM DEFECTS FOR A PERIOD OF ONE YEAR FROM DATE OF ACCEPTANCE AND CONTRACTOR SHALL MAKE GOOD, WITHOUT ADDITIONAL COST TO THE OWNER, ANY DEFECT WHICH MAY APPEAR WITHIN THAT PERIOD. MANUFACTURER'S WARRANTIES EXTENDING BEYOND ONE YEAR SHALL BE PROCESSED AND TURNED OVER TO THE OWNER.

2. SUBMISSION OF SHOP DRAWINGS, PRODUCT DATA, SAMPLES AND PROJECT INFORMATION

A. SHOP DRAWINGS SHALL BE SUBMITTED FOR THE FOLLOWING ITEMS:
(1) MECHANICAL SLEEVE SEALS
(2) FIRE BARRIER PENETRATION SEALS
(3) INSULATION
(4) ALL MECHANICAL EQUIPMENT

B. IDENTIFY ALL MECHANICAL SHOP DRAWINGS, PRODUCT DATA AND SAMPLES WITH THE NAME OF THE PROJECT. CLEARLY MARK THE SPECIFIC ITEMS INTENDED FOR USE. SUBMIT ALL RELATED ITEMS AT ONE TIME.

C. PRIOR TO SUBSTANTIAL COMPLETION OF THE PROJECT, SUBMIT THE FOLLOWING INFORMATION FOR REVIEW AND APPROVAL.
(1) OPERATING AND MAINTENANCE INSTRUCTIONS.
(2) "AS BUILT" DRAWINGS.

3. "AS BUILT" DRAWINGS: CONTRACTOR SHALL KEEP AN ACCURATE RECORD OF THE LOCATION OF ALL CONCEALED DUCTWORK, PIPING, VALVES, CONTROLS, ETC., BOTH INTERIOR AND EXTERIOR. ON COMPLETION OF THE WORK, ONE PRINT EACH OF THE CONTRACT DRAWINGS WHICH ARE APPLICABLE SHALL BE NEATLY AND CLEARLY MARKED IN COLOR TO SHOW ALL VARIATIONS BETWEEN THE WORK ACTUALLY PROVIDED AND THAT INDICATED ON THE CONTRACT DRAWINGS.

4. OPERATING AND MAINTENANCE MANUALS

A. GENERAL: PRIOR TO COMPLETION OF THE PROJECT, THE CONTRACTOR SHALL PROVIDE TWO HARDBACKED LOOSELEAF RING TYPE BINDERS, IDENTIFIED WITH THE NAME OF THE PROJECT. CONTRACTOR SHALL DELIVER THESE BINDERS TO THE ENGINEER FOR REVIEW AND TRANSMITTAL TO THE OWNER. ALTERNATIVELY, ELECTRONIC DOCUMENTS MAY BE PROVIDED WITH OWNER'S AGREEMENT.

B. THE FOLLOWING ITEMS AND OTHER ADDITIONAL PERTINENT DATA FOR EACH ITEM OF EQUIPMENT SHALL BE INCLUDED:
(1) NAME OF MANUFACTURER.
(2) NAME, ADDRESS AND TELEPHONE NUMBER OF NEAREST MANUFACTURER'S REPRESENTATIVE.
(3) COPY OF LATEST APPROVED SHOP DRAWING.
(4) MANUFACTURER'S OPERATING AND MAINTENANCE MANUAL INCLUDING LUBRICATION DATA.
(5) PARTS NUMBERS FOR ALL REPLACEABLE ITEMS.
(6) SERIAL NUMBERS OF ALL PRINCIPAL ITEMS OF EQUIPMENT.
(7) CONTROL DIAGRAMS AND SEQUENCE OF OPERATION.
(8) MANUFACTURER'S WRITTEN GUARANTEES THAT EXTEND BEYOND THE CONTRACTOR'S ONE YEAR GUARANTEE.

C. THE OPERATING AND MAINTENANCE MANUALS SHALL BE CONSIDERED A PART OF THE FINAL INSPECTION AND THEY SHALL BE SUBMITTED FOR APPROVAL AT LEAST THIRTY (30) DAYS PRIOR TO REQUEST FOR FINAL INSPECTION.

5. ACCESS DOORS: ACCESS DOORS SHALL BE PROVIDED FOR ALL CONCEALED VALVES, CONTROLS, AND ANY OTHER EQUIPMENT OR MATERIALS REQUIRING INSPECTION OR MAINTENANCE. ACCESS DOORS SHALL BE FURNISHED FOR FLOORS, WALLS AND CEILINGS, OF ADEQUATE SIZE SO THAT CONCEALED ITEMS WILL BE READILY ACCESSIBLE FOR SERVICING OR FOR REMOVAL AND REPLACEMENT IF NECESSARY.

6. PAINTING

A. SCOPE OF WORK: MECHANICAL EQUIPMENT, MATERIALS, AND RELATED PIPING DO NOT REQUIRE PAINTING EXCEPT AS INDICATED BELOW.

B. EQUIPMENT WITH A FACTORY APPLIED FINISH WILL NOT REQUIRE ADDITIONAL PAINTING EXCEPT TOUCH-UP WITH MATCHING FINISH WHERE IT IS DAMAGED.

C. PIPING, FABRICATED SUPPORTS, OR OTHER UNFINISHED AND UNPROTECTED MATERIALS LOCATED OUTDOORS SHALL BE PAINTED WITH A SUITABLE PRIMER AND COMPATIBLE FINISH PAINT. COLOR SHALL BE AS DIRECTED BY ENGINEER.

D. PAINT INSIDE OF DUCTWORK WITH MATTE BLACK PAINT WHERE VISIBLE BEHIND AIR INLETS AND OUTLETS.

E. PROTECTION OF WORK: PAINTING SHALL BE DONE WITH ALL POSSIBLE CARE TO PROTECT THIS WORK AND WORK OF OTHER TRADES. ALL DAMAGE TO THIS AND OTHER WORK CAUSED BY THE PAINTING OPERATIONS SHALL BE CORRECTED, CLEANED OR REPAIRED AS REQUIRED. HARDWARE, SPECIAL CONTROL ITEMS, GAUGES, THERMOMETERS, NAMEPLATES, INSTRUMENT GLASS AND OTHER SIMILAR ITEMS SHALL BE REMOVED OR PROPERLY PROTECTED DURING THE PAINTING OPERATIONS TO INSURE THAT THESE ITEMS ARE NOT COVERED OR SPLATTERED WITH PAINT.

7. IDENTIFICATION

A. SUBMITTALS
(1) SUBMIT LIST OF WORDING, SYMBOLS, LETTER SIZE, AND COLOR CODING FOR MECHANICAL IDENTIFICATION.
(2) SUBMIT VALVE CHART AND SCHEDULE, INCLUDING VALVE TAG NUMBER, LOCATION, FUNCTION, AND VALVE MANUFACTURER'S NAME AND MODEL NUMBER.
(3) PRODUCT DATA: PROVIDE MANUFACTURERS CATALOG LITERATURE FOR EACH PRODUCT REQUIRED.

B. NAMEPLATES
(1) DESCRIPTION: LAMINATED THREE-LAYER PLASTIC WITH ENGRAVED LETTERS ON LIGHT CONTRASTING BACKGROUND COLOR.

C. TAGS
(1) METAL TAGS: BRASS WITH STAMPED LETTERS; TAG SIZE MINIMUM 1-1/2 INCHES (40 MM) DIAMETER.
(2) CHART: TYPEWRITTEN LETTER SIZE LIST IN ANODIZED ALUMINUM FRAME.

D. STENCILS
(1) STENCILS: WITH CLEAN CUT SYMBOLS AND LETTERS OF FOLLOWING SIZE:
(A) 3/4 TO 1-1/4 INCHES (20-30 MM) OUTSIDE DIAMETER OF INSULATION OR PIPE: 8 INCHES (200 MM) LONG COLOR FIELD, 1/2 INCHES (15 MM) HIGH LETTERS.
(B) 1-1/2 TO 2 INCHES (40-50 MM) OUTSIDE DIAMETER OF INSULATION OR PIPE: 8 INCHES (200 MM) LONG COLOR FIELD, 3/4 INCH (20 MM) HIGH LETTERS.
(C) 2-1/2 TO 6 INCHES (65-150 MM) OUTSIDE DIAMETER OF INSULATION OR PIPE: 12 INCHES (300 MM) LONG COLOR FIELD, 1-1/4 INCHES (30 MM) HIGH LETTERS.
(D) DUCTWORK AND EQUIPMENT: 2-1/2 INCHES (65 MM) HIGH LETTERS.
(2) STENCIL PAINT: SEMI-GLOSS ENAMEL, COLORS CONFORMING TO ASME A13.1.

E. PIPE MARKERS
(1) COLOR: CONFORM TO ASME A13.1.
(2) PLASTIC PIPE MARKERS: FACTORY FABRICATED, FLEXIBLE, SEMI- RIGID PLASTIC, PREFORMED TO FIT AROUND PIPE OR PIPE COVERING; MINIMUM INFORMATION INDICATING FLOW DIRECTION ARROW AND IDENTIFICATION OF FLUID BEING CONVEYED.

F. CEILING TACKS
(1) DESCRIPTION: STEEL WITH 3/4 INCH (20 MM) DIAMETER COLOR CODED HEAD.
(2) COLOR CODE AS FOLLOWS:
(A) YELLOW – HVAC EQUIPMENT
(B) RED – FIRE DAMPERS/SMOKE DAMPERS
(C) GREEN – PLUMBING VALVES
(D) BLUE – HEATING/COOLING VALVES

G. INSTALLATION
(1) DEGREASE AND CLEAN SURFACES TO RECEIVE ADHESIVE FOR IDENTIFICATION MATERIALS.
(2) INSTALL PLASTIC NAMEPLATES WITH CORROSIVE-RESISTANT MECHANICAL FASTENERS, OR ADHESIVE. APPLY WITH SUFFICIENT ADHESIVE TO ENSURE PERMANENT ADHESION AND SEAL WITH CLEAR LACQUER.
(3) INSTALL TAGS WITH CORROSION RESISTANT CHAIN.
(4) INSTALL PLASTIC PIPE MARKERS IN ACCORDANCE WITH MANUFACTURER'S INSTRUCTIONS.
(5) IDENTIFY AIR CONDITIONING UNITS AND FANS WITH PLASTIC NAMEPLATES OR STENCIL PAINTING.
(6) IDENTIFY CONTROL PANELS AND MAJOR CONTROL COMPONENTS OUTSIDE PANELS WITH PLASTIC NAMEPLATES.
(7) IDENTIFY DUCTWORK WITH PLASTIC NAMEPLATES OR STENCILLED PAINTING. IDENTIFY WITH AIR HANDLING UNIT OR FAN AND AREA BEING SERVED.
(8) TAG AUTOMATIC CONTROLS, INSTRUMENTS, AND RELAYS. KEY TO CONTROL SCHEMATIC.
(9) IDENTIFY PIPING, CONCEALED OR EXPOSED, WITH PLASTIC PIPE MARKERS OR STENCILLED PAINTING. IDENTIFY SERVICE, FLOW DIRECTION, AND PRESSURE. INSTALL IN CLEAR VIEW AND ALIGN WITH AXIS OF PIPING. LOCATE IDENTIFICATION NOT TO EXCEED 20 FEET (6 M) ON STRAIGHT RUNS INCLUDING RISERS AND DROPS, ADJACENT TO EACH VALVE AND TEE, AT EACH SIDE OF PENETRATION OF STRUCTURE OR ENCLOSURE, AND AT EACH OBSTRUCTION.
(10) PROVIDE CEILING TACKS TO LOCATE VALVES ABOVE T-BAR TYPE PANEL CEILINGS. LOCATE IN CORNER OF PANEL CLOSEST TO EQUIPMENT.

8. CONCRETE EQUIPMENT PADS

A. UNLESS OTHERWISE NOTED, CONCRETE PADS NOT LESS THAN 4 INCHES HIGH AND WHICH PROJECT NOT LESS THAN 4 INCHES BEYOND THE EQUIPMENT ON ALL SIDES SHALL BE PROVIDED ALL FLOOR-MOUNTED EQUIPMENT. CONCRETE SHALL HAVE A COMPRESSIVE STRENGTH OF 3000 PSI @ 28 DAYS, 3% TO 8% AIR ENTRAINMENT, 6 INCHES SLUMP MAXIMUM UPON PLACEMENT. CONCRETE SHALL NOT BE PLACED WHEN TEMPERATURE WILL FALL BELOW 32 DEGREES F DURING PLACEMENT OR DURING A PERIOD OF THREE DAYS AFTER PLACEMENT. ANCHOR BOLTS SHALL BE SET PRIOR TO POURING OF THE SLABS. ARRANGE PAD AND OUTDOOR UNIT SO THAT COILS ARE A MINIMUM OF 12" ABOVE FINISHED GRADE.

9. INSULATION

A. FLAME/SMOKE RATINGS: PROVIDE COMPOSITE PLUMBING INSULATION (INSULATION, JACKETS, COVERINGS, SEALERS, MASTICS AND ADHESIVES) WITH FLAME-SPREAD RATING OF 25 OR LESS, AND SMOKE-DEVELOPED RATING OF 50 OR LESS, AS TESTED BY ANSI/ASTM E84 (NFPA 255) METHOD. INSULATION SHALL BE LABELED BY THE MANUFACTURER. THE LABEL SHALL INDICATE THE INSULATING VALUE, FLAME SPREAD AND SMOKE-DEVELOPED RATING.

B. SUBMITTALS: SUBMIT MANUFACTURER'S SPECIFICATIONS AND INSTALLATION INSTRUCTIONS FOR EACH TYPE OF INSULATION. SUBMIT SCHEDULE SHOWING MANUFACTURER'S PRODUCT NUMBER THICKNESS, AND FURNISHED ACCESSORIES FOR EACH SYSTEM REQUIRING INSULATION.

C. INSTALLATION: INSULATION SHALL BE APPLIED IN ACCORDANCE WITH MANUFACTURER'S RECOMMENDATIONS USING ONLY ADHESIVES, MASTICS AND PLUMBING FASTENERS APPROVED BY THE INSULATION MANUFACTURER. INSULATION SHALL NOT BE APPLIED UNTIL AFTER THE EQUIPMENT HAS BEEN TESTED WITH RESULTS ACCEPTABLE TO THE ARCHITECT/ENGINEER. INSULATION WITH A VAPOR BARRIER JACKET SHALL BE APPLIED WITH A CONTINUOUS, UNBROKEN VAPOR SEAL AND ALL JOINTS SHALL BE SEALED WITH A VAPOR BARRIER ADHESIVE UNLESS OTHERWISE INDICATED. STAPLES, STICK CLIPS AND HANGERS SHALL BE VAPOR SEALED WHERE THEY PUNCTURE VAPOR BARRIER JACKETS.

D. MATERIALS:

(1) FLEXIBLE DUCT INSULATION: ASTM C1290, MINERAL FIBER BLANKET, WITH OPERATING TEMPERATURE OF 250°F. THERMAL CONDUCTIVITY "K"=0.30 AT 75°F, DENSITY=0.75 LB/CU. FT. F AT 75 DEGREES F. FACTORY APPLIED JACKET (ASJ) SHALL CONSIST OF WHITE KRAFT PAPER BONDED TO ALUMINUM FOIL AND REINFORCED WITH GLASS FIBER YARN. EQUAL TO OWENS-CORNING ASJ.

(2) FLEXIBLE CERAMIC FIBER INSULATION: BLANKET TYPE INSULATION, MINIMUM 8LB/CU FT DENSITY, HAVING A "K" FACTOR OF 0.24 AT 70°F MEAN TEMPERATURE NON-COMBUSTIBLE WITH FLAME SPREAD, SMOKE DEVELOPED, AND FUEL CONTRIBUTED INDEXES OF 0, ASTM 84/UL 723; MELTING POINT OF 3200°F; NORMAL SERVICE RANGE UP TO 2300°F; INSTALL WITH 3" THICKNESS FOR 2-HOUR FIRE RATING AND ZERO CLEARANCE TO COMBUSTIBLES. INSULATION SHALL BE THERMAL CERAMICS KAOWOOL FIREMASTER BLANKET, FIBERFRAX DURABLANKET, OR APPROVED EQUAL.

(3) ELASTOMERIC CELLULAR FOAM PIPE INSULATION: ASTM C534, TYPE 1 TUBULAR FORM, UNSLIT TUBING OR PRE-SLIT TUBULAR WITH FACTORY APPLIED PRESSURE SENSITIVE ADHESIVE. "K"=0.27 AT 75 DEGREES F, SERVICE TEMPERATURE OF TO 200°F. NO JACKET REQUIRED.

E. DUCT INSULATION

(1) DUCT INSULATION: INSULATE ALL SUPPLY AIR, OUTDOOR AIR DUCTS AND RETURN DUCTS.

(2) PROVIDE INSULATION WITH VAPOR RETARDER JACKETS. PIPING SYSTEM WITH EQUIVALENT THICKNESS AND COMPOSITION OF INSULATION AS APPLIED TO ADJOINING PIPE RUN.

(3) EXTEND DUCT INSULATION WITHOUT INTERRUPTION THROUGH WALLS, FLOORS AND SIMILAR PIPING PENETRATIONS, EXCEPT WHERE OTHERWISE INDICATED.

(4) INSTALL PROTECTIVE METAL SHIELDS AND INSULATED INSERTS WHEREVER NEEDED TO PREVENT COMPRESSION OF INSULATION.

(5) SUPPLY, RETURN AND OUTSIDE AIR DUCTS: INSULATE WITH 2" THICK FLEXIBLE DUCTWORK INSULATION.

(6) DUCTWORK CONNECTED TO HOOD: INSULATE WITH 3" THICK FLEXIBLE CERAMIC FIBER INSULATION.

F. PIPE INSULATION

(1) REFRIGERANT SUCTION AND HOT GAS PIPING: INSULATE 1-1/2" AND SMALLER PIPES WITH 1-1/2" THICK ELASTOMERIC CELLULAR FOAM INSULATION. INSULATE LARGER THAN 1-1/2" PIPES WITH 2" THICK ELASTOMERIC CELLULAR FOAM.

(2) CONDENSATE DRAIN PIPING: INSULATE ALL PIPING WITH 1/2" THICK ELASTOMERIC CELLULAR FOAM INSULATION.

10. DUCTWORK

A. GALVANIZED STEEL DUCTS: ASTM A653/A653M GALVANIZED STEEL SHEET, LOCK-FORMING QUALITY, HAVING G60 ZINC COATING IN CONFORMANCE WITH ASTM A90/90M.

B. KITCHEN EXHAUST DUCTS: FABRICATE KITCHEN EXHAUST DUCTS AND SUPPORTS, USED FOR SMOKE AND VAPOR REMOVAL FROM COOKING EQUIPMENT, OF 16 GAUGE MINIMUM BLACK STEEL. FOR DUCT CONSTRUCTION, COMPLY WITH SMACNA "HVAC DUCT CONSTRUCTION STANDARDS", AND NFPA 96 "REMOVAL OF SMOKE AND GREASE-LADEN VAPORS FROM COMMERCIAL COOKING EQUIPMENT". CONTINUOUSLY WELD JOINTS AND SEAMS FOR GREASE-TIGHT CONSTRUCTION. PROVIDE ACCESS DOORS ON HORIZONTAL DUCT SECTIONS AND AT ANY CHANGE IN DIRECTION AS REQUIRED BY CODE.

C. FABRICATE AND SUPPORT IN ACCORDANCE WITH SMACNA HVAC DUCT CONSTRUCTION STANDARDS – METAL AND FLEXIBLE.

D. WHERE RECTANGULAR ELBOWS ARE USED, FURNISH TURNING VANES.

E. INCREASE DUCT SIZES GRADUALLY, NOT EXCEEDING 15° DIVERGENCE WHEREVER POSSIBLE; MAXIMUM 30° DIVERGENCE UPSTREAM OF EQUIPMENT AND 45° CEONVERGENCE DOWNSTREAM.

F. FLEXIBLE DUCT CONNECTIONS SHALL BE FABRICATED IN ACCORDANCE WITH SMACNA HVAC DUCT CONSTRUCTION STANDARDS – METAL AND FLEXIBLE.

G. VOLUME CONTROL DAMPERS SHALL BE RUSKIN MODEL MD-35 AND SHALL BE FABRICATED IN ACCORDANCE WITH SMACNA HVAC DUCT CONSTRUCTION STANDARDS – METAL AND FLEXIBLE.

11. THE REFRIGERANT PIPING SYSTEM SHALL BE TYPE ACR COPPER TUBE, SOFT ANNEALED TEMPER WITH CAST COPPER-ALLOY FITTINGS FOR FLARED COPPER TUBES. MATERIALS SHALL BE IN ACCORDANCE WITH ANSI B31.5, CODE FOR REFRIGERATION

12. DIFFUSERS, REGISTERS AND GRILLES

A. DIFFUSERS, REGISTERS AND GRILLES SHALL BE THE TYPE, MATERIAL, AIR PATTERN AND FINISH INDICATED ON THE DRAWINGS.

B. INSTALL AIR OUTLETS AND INLETS IN ACCORDANCE WITH MANUFACTURER'S INSTRUCTIONS. INSTALL DIFFUSERS, REGISTERS AND GRILLES TO DUCTWORK WITH AIRTIGHT CONNECTION.

13. CLEANING AND TESTING

A. CLEAN EQUIPMENT AND FIXTURES TO A SANITARY CONDITION WITH CLEANING MATERIALS APPROPRIATE TO THE SURFACE AND MATERIAL BEING CLEANED. CLEAN DUCT SYSTEMS AND FORCE AIR AT HIGH VELOCITY THROUGH DUCT TO REMOVE ACCUMULATED DUST.

B. REPLACE FILTERS OF OPERATING EQUIPMENT.

C. HEATING AND COOLING SYSTEMS AND EXHAUST SYSTEMS SHALL BE TESTED, ADJUSTED AND BALANCED (TAB). AIR HANDLING SYSTEMS SHALL BE ADJUSTED TO WITHIN +/- 10% OF DESIGN. THE TOTAL OF AIR OUTLETS AND INLETS SHALL BE ADJUSTED TO WITHIN PLUS 10% AND MINUS 5% OF DESIGN TO SPACE. ADJUST OUTLETS AND INLETS IN SPACE TO WITHIN +/- 10% OF DESIGN.

D. THE TAB CONTRACTOR SHALL NOT BE AFFILIATED IN ANY WAY BE WITH THE INSTALLING CONTRACTOR OR EQUIPMENT SUPPLIERS. PROVIDE TAB REPORT.

END OF SPECIFICATIONS

DRAWING LIST

M-1	MECHANICAL SPECIFICATIONS
M-2	MECHANICAL SCHEDULES
M-3	MECHANICAL FLOOR PLAN
M-4	MECHANICAL DETAILS

S. HOYT WILLIAMS PE, LLC
10714 ROCK ARBOR WAY, KNOXVILLE TN. 37922
423 914 5601
MECHANICAL ELECTRICAL & PLUMBING ENGINEERING
SHWILLIAMSPE@GMAIL.COM

COMMONWEALTH OF VIRGINIA
MELINDA D. RUBLE
No. 028163
05.17.2024
PROFESSIONAL ENGINEER

No.	Date	Revision
	03.29.24	95% REVIEW SET
	05.17.24	PERMIT & BID SET

MOUNT RODGERS PLACE
BRISTOL, VIRGINIA
180 Bristol East Road - Bristol, Virginia 24201

MECHANICAL SPECIFICATIONS

Date 03.29.24
Scale AS INDICATED
Designed By
Drawn By
Checked By
Project Number
Sheet M-1

SPLIT SYSTEM FURNACE SCHEDULE

INDOOR UNIT															OUTDOOR UNIT				
MARK	MANUFACTURER & MODEL NO.	CFM	EVAP. FAN HP	VOLTS ø	S.P. IN WG	GAS FURNACE					COOLING CAPACITY		O.A. CFM	WEIGHT	MARK	MANUFACTURER & MODEL NO.	VOLTS ø	MCA	MOCP	WEIGHT
					EXT.	INPUT (MBH)	OUTPUT (MBH)	% EFF	MCA	MOCP	TOTAL MBH	SENS MBH								
F-1	CARRIER 59MN7C-120-22	1995	1	120/1	0.5	120	117	98	19.1	20	59.1	46.0	160	160 LBS.	HP-1	CARRIER 24VNA960A	208/1	33.2	50	250 LBS.
F-2	CARRIER 59MN7C-120-22	1995	1	120/1	0.5	120	117	98	19.1	20	59.1	46.0	290	160 LBS.	HP-2	CARRIER 24VNA960A	208/1	33.2	50	250 LBS.
F-3	CARRIER 59MN7C-120-22	1995	1	120/1	0.5	120	117	98	19.1	20	59.1	46.0	290	160 LBS.	HP-3	CARRIER 24VNA960A	208/1	33.2	50	250 LBS.
F-4	CARRIER 59MN7C-120-22	1995	1	120/1	0.5	120	117	98	19.1	20	59.1	46.0	210	160 LBS.	HP-4	CARRIER 24VNA960A	208/1	33.2	50	250 LBS.

NOTES:
- INCLUDE HONEYWELL PRO THERMOSTAT WITH LOCKABLE COVER, CONDENSATE PUMP (IF REQUIRED) AND CONCENTRIC VENT SYSTEM.
- WEIGHTS ARE APPROXIMATE AND INCLUDE ACCESSORIES
- ALL AIR HANDLERS HAVE SINGLE POINT POWER CONNECTIONS
- ALL AIR HANDLERS TO HAVE GLOBAL PLASMA SOLUTIONS GPS-FC24-AC AIR CLEANER. UNITS SHALL BE AUTOCLEANING AND IN ACCORDANCE WITH UL-2998.
- UNITS TO BE A MINIMUM OF 15 SEER.

FAN SCHEDULE

UNIT	CFM	S.P.	RPM	MOTOR			MANUFACTURER/MODEL	CONTROL	NOTES
				WATTS	VOLTS	PH			
EF-1	75	0.25	900	17	120	1	GREENHECK SP-A90	MOTION SENSOR	1
EF-2	75	0.25	900	17	120	1	GREENHECK SP-A90	MOTION SENSOR	1
EF-3	75	0.25	900	17	120	1	GREENHECK SP-A90	CONTINUOUSLY DURING OCCUPIED TIMES	1
EF-4	75	0.25	900	17	120	1	GREENHECK SP-A90	MOTION SENSOR	1
EF-5	75	0.25	900	17	120	1	GREENHECK SP-A90	MOTION SENSOR	1
EF-6	75	0.25	900	17	120	1	GREENHECK SP-A90	MOTION SENSOR	1
EF-7	75	0.25	900	17	120	1	GREENHECK SP-A90	MOTION SENSOR	1
EF-8	75	0.25	900	17	120	1	GREENHECK SP-A90	MOTION SENSOR	1
EF-9	75	0.25	900	17	120	1	GREENHECK SP-A90	MOTION SENSOR	1
EF-10	110	0.25	641	17	120	1	GREENHECK SP-A200	CONTINUOUSLY DURING OCCUPIED TIMES	1
EF-11	75	0.25	900	17	120	1	GREENHECK SP-A90	THERMOSTAT	1

SCHEDULE NOTES:
1. PROVIDE WITH DISCONNECT, SPEED CONTROLLER, ROOF/WALL CAP. CONTROL AS INDICATED.
2. BELT DRIVE FAN WITH DISCONNECT, BACKDRAFT DAMPER, FILTER BOX WITH 1" ALUMINUM FILTERS.

ROOF VENT SCHEDULE

MARK	MANUFACTURER & MODEL NO.	THROAT AREA	VENT HEIGHT INCHES
RV-1	GREENHECK GRSI-8	0.37	7-1/4
RV-2	GREENHECK GRSI-15	1.12	10
RV-3	GREENHECK GRSI-8	0.37	7-1/4

NOTES:
- PROVIDE MOTOR OPERATED DAMPER, ROOF CURB, BIRDSCREEN

ELECTRIC WALL HEATER SCHEDULE

MARK	MANUFACTURER & MODEL NO.	MBH	CFM	KW	VOLT/PH
WH-1	MARKEL E3323TTD-RP	5.1	400	1.5	120/1

NOTES:
- PROVIDE WITH DISCONNECT SWITCH & IN-BUILT THERMOSTAT

RANGE HOOD RH-1

BROAN 413004 STAINLESS STEEL RECIRCULATING RANGE HOOD

GRILLES, REGISTERS AND DIFFUSERS SCHEDULE

MARK	MANUFACTURER & MODEL NO.	DESCRIPTION	MATERIAL	FINISH	ACCESSORIES & FEATURES
SUPPLY DIFFUSERS					
CD-1	METALAIRE 5750-6	24"X24" LOUVER FACE DIFFUSER WITH 6"ø NECK FOR LAY-IN CLG	STEEL	WHITE	BDS DAMPER, CEILING RADIATION DAMPER
CD-2	METALAIRE 5750-6	24"X24" LOUVER FACE DIFFUSER WITH 8"ø NECK FOR LAY-IN CLG	STEEL	WHITE	BDS DAMPER, CEILING RADIATION DAMPER
CD-3	METALAIRE 5750-6	24"X24" LOUVER FACE DIFFUSER WITH 10"ø NECK FOR LAY-IN CLG	STEEL	WHITE	BDS DAMPER, CEILING RADIATION DAMPER
CD-4	METALAIRE 5750-6	24"X24" LOUVER FACE DIFFUSER WITH 8"ø NECK FOR LAY-IN CLG	STEEL	WHITE	BDS DAMPER
GRILLES & REGISTERS					
CG-1	METALAIRE 7550R-6	24"X24" CEILING RET GRILLE WITH 8"X8" NECK FOR LAY-IN CEILING	STEEL	WHITE	CEILING RADIATION DAMPER
CG-2	METALAIRE 7550R-6	24"X24" CEILING RET GRILLE WITH 12"X12" NECK FOR LAY-IN CEILING	STEEL	WHITE	CEILING RADIATION DAMPER
CG-3	METALAIRE 7550R-6	24"X24" CEILING RET GRILLE WITH 16"X16" NECK FOR LAY-IN CEILING	STEEL	WHITE	CEILING RADIATION DAMPER
CG-4	METALAIRE 7550R-6	24"X24" CEILING RET GRILLE WITH 22"X22" NECK FOR LAY-IN CEILING	STEEL	WHITE	CEILING RADIATION DAMPER
CG-5	METALAIRE 7550R-6	24"X24" CEILING RET GRILLE WITH 12"X12" NECK FOR LAY-IN CEILING	STEEL	WHITE	--
DG-1	ANEMOSTAT FLDL-UL	12"X12" DOOR GRILLE WITH 90 MINUTE FIRE DAMPER	STEEL	WHITE	--

LEGEND

R	REFRIGERANT
12 x 6	RECTANGULAR DUCT
	FLEXIBLE CONNECTION
VD	VOLUME DAMPER
	SUPPLY DUCT UP (OR FROM ABOVE)
	SUPPLY DUCT DOWN (OR FROM BELOW)
	RETURN OR EXHAUST DUCT UP
	RETURN OR EXHAUST DUCT DOWN
	FLEXIBLE DUCT
MOD	MOTOR OPERATED DAMPER
	REDUCER
T	THERMOSTAT OR TEMPERATURE SENSOR

ABBREVIATIONS

BTU	BRITISH THERMAL UNIT
CD	CEILING DIFFUSER
CFM	CUBIC FEET PER MINUTE
CG	CEILING GRILLE
CR	CEILING REGISTER
DB	DRY BULB TEMPERATURE
EAT	ENTERING AIR TEMPERATURE
EXT	EXTERNAL
F	DEGREES FAHRENHEIT
FDPR	FIRE DAMPER
FT	FEET
HP	HORSEPOWER
IN	INCH, INCHES
MAX	MAXIMUM
MBH	THOUSAND BTU PER HOUR
VD	VOLUME DAMPER
MIN	MINIMUM
MOD	MOTOR OPERATED DAMPER
OA	OUTSIDE AIR
PSI	POUNDS PER SQUARE INCH
PSIG	POUNDS PER SQUARE INCH GAGE
RA	RETURN AIR
TEMP	TEMPERATURE
TYP	TYPICAL
WC, WG	WATER COLUMN
ABV	ABOVE
BEL	BELOW
BET	BETWEEN
CLG	CEILING
EA	EACH
FLEX	FLEXIBLE
FR	FROM

GENERAL MECHANICAL NOTES

1. INSTALL THERMOSTATS WITH CENTER AT 4'8" ABOVE FLOOR. WHERE THERMOSTATS AND SNAP SWITCHES (SEE ELECTRICAL DRAWINGS) ARE INDICATED IN CLOSE PROXIMITY ON THE SAME WALL, THE LOCATIONS SHALL BE COORDINATED SO THAT THE THERMOSTAT IS CENTERED DIRECTLY OVER SNAP SWITCH OR GROUP OF SNAP SWITCHES.
2. DUCT DIMENSIONS INDICATED ARE SHEET METAL DIMENSIONS.
3. COORDINATE LOCATIONS OF CEILING MOUNTED DIFFUSERS, REGISTERS AND GRILLES WITH LIGHT FIXTURES AND CEILING GRID. REFER TO ELECTRICAL DRAWINGS.
4. FIRST FIGURE OF DUCT SIZE INDICATES DIMENSION OF SIDE SHOWN OR INDICATED.
5. ACCESS SHALL BE MAINTAINED TO ALL CONTROL DEVICES. ACCESS PANEL SIZES AND LOCATIONS SHALL BE DETERMINED PRIOR TO BIDDING AND SHALL BE INCLUDED IN THE BID PRICE FOR CONTRACT WORK. ACCESS PANELS SHALL BE INSTALLED WHERE REQUIRED AND SHALL BE FIRE RATED WHEN USED IN FIRE RESISTIVE CONSTRUCTION.
6. PIPING AND DUCTWORK SHALL BE SUPPORTED FROM, OR ANCHORED TO, THE BUILDING STRUCTURE; CEILING CONSTRUCTION SHALL NOT BE USED FOR SUPPORT OR ANCHORING OF WORK.
7. TEMPERATURE CONTROL WIRING WIRING LESS THAN 100 VOLTS SHALL BE PROVIDED IN DIVISION 15. WIRING 100 VOLTS AND GREATER SHALL BE PROVIDED IN DIVISION 16.
8. MAINTAIN ACCESS BELOW EQUIPMENT INSTALLED ABOVE CEILINGS. DO NOT OBSTRUCT ACCESS WITH PIPING OR DUCTWORK.
9. PROVIDE MANUAL VOLUME DAMPERS AS REQUIRED TO PROPERLY BALANCE THE SYSTEM.
10. CONTRACTOR SHALL CLOSELY COORDINATE LOCATIONS OF ALL PANELBOARDS WITH LOCATIONS OF ALL DUCTWORK AND PLUMBING PIPING. DUCTWORK AND PLUMBING PIPING SHALL NOT BE INSTALLED OVER TOP OF ANY PANELBOARD. DUCTWORK AND PLUMBING PIPING SHALL NOT BE INSTALLED OVER ANY OF THE CODE REQUIRED CLEAR SPACES AT ANY PANELBOARD LOCATION.

HVAC CONTROLS

1. PROVIDE DOCUMENTATION AND TRAINING TO OWNER ALONG WITH ONE YEAR WARRANTY. LABEL ALL CONTROLS AND EQUIPMENT THE SAME AS IDENTIFIED ON THE DRAWINGS AND SUBMITTALS. SUBMIT SHOP DRAWINGS AND DETAILED SEQUENCE OF OPERATION OF CONTROL SYSTEM PRIOR TO INSTALLATION.
2. CONTROLS SHALL INCLUDE ALL THERMOSTATS, SENSORS, VALVES, DAMPERS, TRANSFORMERS, STARTERS, RELAYS, WIRING, INTERLOCKS AND OTHER DEVICES TO ENABLE THE SEQUENCE OF OPERATION. CONTROLS SHALL BE COORDINATED WITH THE EQUIPMENT PROVIDED.
3. PROVIDE START-UP AND VERIFICATION OF CONTROL SYSTEM & SEQUENCE OF OPERATION. COORDINATE WITH TEST & BALANCE CONTRACTOR TO OPERATE EQUIPMENT IN ALL MODES AND DEVICE POSITIONS.
4. ROOM SENSOR SHALL HAVE DIGITAL DISPLAY AND TIMED OVERRIDE BUTTON. ALL SENSORS SHALL HAVE THE CAPABILITY TO ADJUST ROOM TEMPERATURE SETPOINT OR TO HAVE THIS FUNCTION LOCKED OUT.
5. SPLIT SYSTEMS: IN OCCUPIED MODE, THE SUPPLY FAN SHALL RUN CONTINUOUSLY, THE OUTSIDE AIR DAMPER SHALL OPEN AND THE UNIT CONTROLLER WILL MAINTAIN ROOM SETPOINT BY CYCLING THE COOLING/HEATING. IN UNOCCUPIED MODE, THE UNITS SHALL BE DE-ENERGIZED UNTIL A CALL FOR SETBACK HEATING OR COOLING BY THE UNIT CONTROLLER. THE OUTSIDE AIR DAMPER SHALL REMAIN CLOSED AT ALL TIMES DURING UNOCCUPIED MODE. OVERRIDE BUTTON ON THERMOSTAT SHALL PLACE THE UNIT IN OCCUPIED MODE FOR TWO HOURS (ADJUSTABLE).

S. HOYT WILLIAMS PE, LLC
10714 ROCK ARBOR WAY,
KNOXVILLE TN. 37922
423 914 5601
MECHANICAL ELECTRICAL & PLUMBING ENGINEERING
SHWILLIAMSPE@GMAIL.COM

COMMONWEALTH OF VIRGINIA
MELINDA D. RUBLE
No. 028163
05.17.2024
PROFESSIONAL ENGINEER

No.	Date	Revision
	03.29.24	95% REVIEW SET
	05.17.24	PERMIT & BID SET

MOUNT RODGERS PLACE
BRISTOL, VIRGINIA
180 Bristol East Road - Bristol, Virginia 24201

MECHANICAL SCHEDULES

Date 03.29.24
Scale AS INDICATED
Designed By
Drawn By
Checked By
Project Number
Sheet M-2

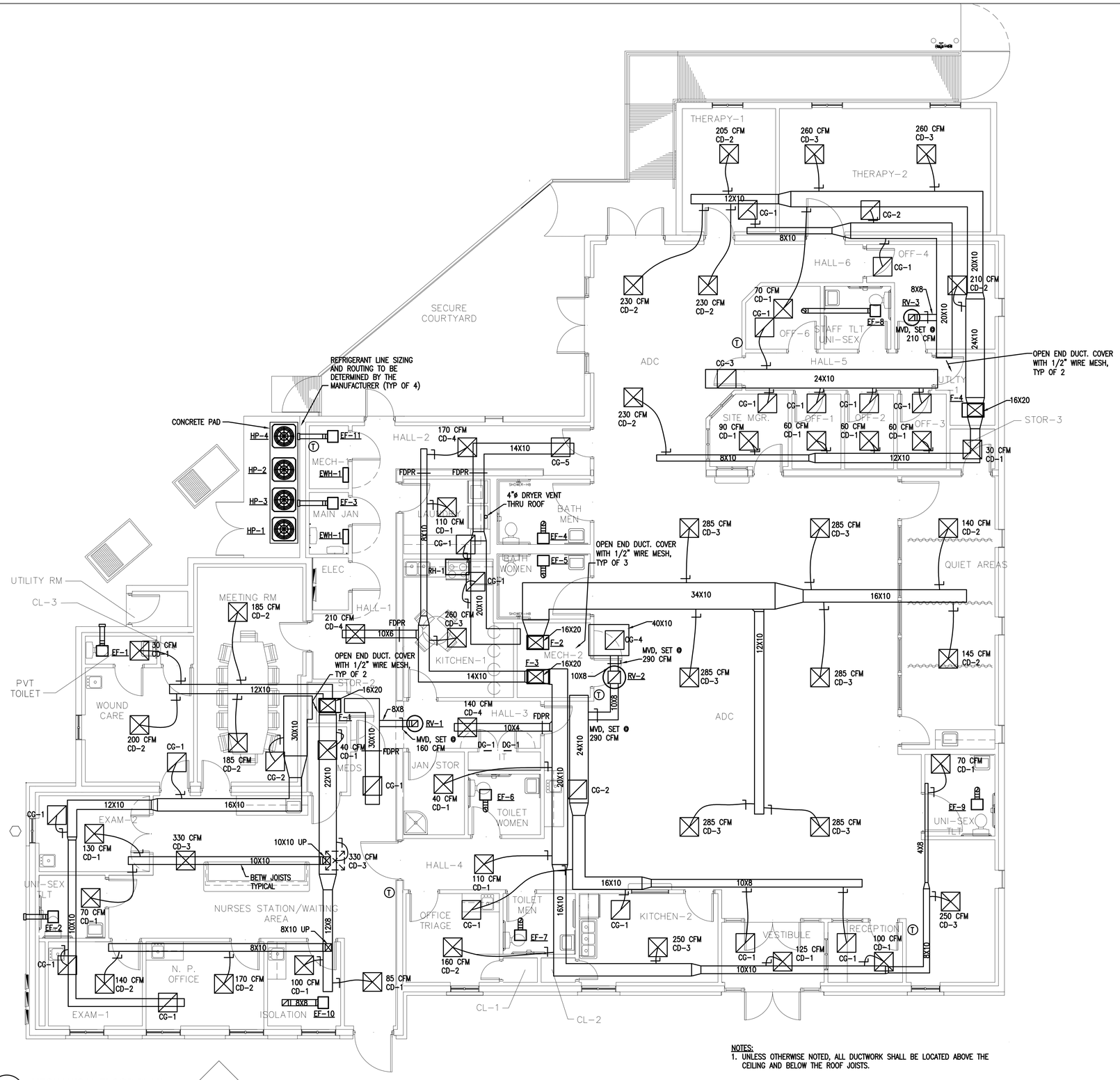

NOTES:
1. UNLESS OTHERWISE NOTED, ALL DUCTWORK SHALL BE LOCATED ABOVE THE CEILING AND BELOW THE ROOF JOISTS.

1 A-1 A-1 **MECHANICAL FLOOR PLAN**
0' 2' 4' 8'
7,495 SF

S. HOYT WILLIAMS PE, LLC
10714 ROCK ARBOR WAY, KNOXVILLE TN. 37922
423 914 5601
MECHANICAL ELECTRICAL & PLUMBING ENGINEERING
SHWILLIAMSPE@GMAIL.COM

COMMONWEALTH OF VIRGINIA
MELINDA D. RUBLE
No. 028163
05.17.2024
PROFESSIONAL ENGINEER

No.	Date	Revision
	03.29.24	95% REVIEW SET
	05.17.24	PERMIT & BID SET

MOUNT RODGERS PLACE
BRISTOL, VIRGINIA
180 Bristol East Road - Bristol, Virginia 24201

MECHANICAL FLOOR PLAN

Date 03.29.24
Scale AS INDICATED
Designed By
Drawn By
Checked By
Project Number
Sheet **M-3**

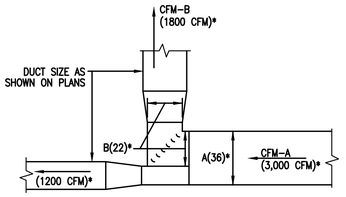

A – WIDTH OF DUCT MAIN BEFORE TAKEOFF.
B – WIDTH OF TAKEOFF CONNECTION.
CFM-A – TOTAL AIR QUANTITY PASSING THRU DUCT AT A INCLUDING QUANTITY REMOVED AT TAKEOFF B.
CFM-B – AIR QUANTITY REMOVED THRU TAKEOFF B

$B = \frac{CFM-B}{CFM-A} \times A$

* EXAMPLE: CFM-A = 3000 CFM, CFM-B = 1800 CFM, A = 36" $B = \frac{1800\ CFM}{3000\ CFM} \times 36" = 21.6"$

SAY B = 22" (ROUND OFF TO NEAREST INCH)

DETAIL – BRANCH DUCT CONNECTION
NO SCALE

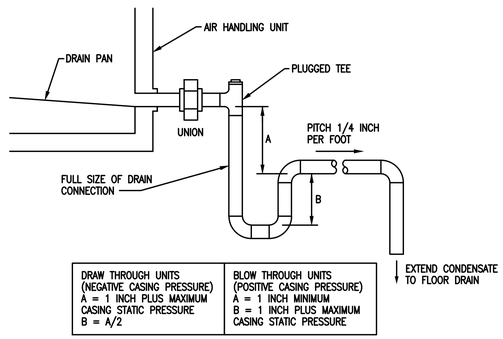

DRAW THROUGH UNITS (NEGATIVE CASING PRESSURE)	BLOW THROUGH UNITS (POSITIVE CASING PRESSURE)
A = 1 INCH PLUS MAXIMUM CASING STATIC PRESSURE B = A/2	A = 1 INCH MINIMUM B = 1 INCH PLUS MAXIMUM CASING STATIC PRESSURE

DETAIL – CONDENSATE DRAIN
NO SCALE

HANGER SIZES FOR RECTANGULAR DUCT			
MAX. SIDE	HANGER	HORIZONTAL SUPPORT ANGLE	MAXIMUM SPACING
30"	1"X18" GAGE STRAP	NONE REQUIRED	10'-0"

NOTE:
ALL SUPPLY AIR DUCT SHALL BE WRAPPED EXTERNALLY AS PER SPECIFICATIONS

NO POP RIVETS ALLOWED

SELF TAPPING CADMIUM PLATED HEX HEAD SHEET METAL SCREW STRAPS TO BE TIGHT AGAINST DUCT.

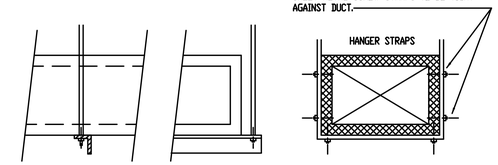

DUCT STRAP HANGER DETAIL
NOT TO SCALE

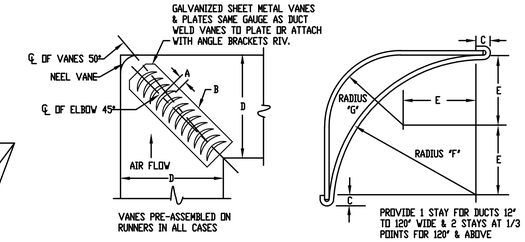

D & D UP TO 24"	A = 1-1/2"	B = 5"	TYPE "B" VANES
D & D OVER 24"	A = 3-1/4"	B = 9"	TYPE "A" VANES
TYPE "A" VANES	C = 1/2"	E = 2-1/4"	RADIUS "F" = 4-1/2" RADIUS "G" = 2-1/4"
TYPE "B" VANES	C = 1/4"	E = 1"	RADIUS "F" = 2" RADIUS "G" = 1"

SQUARE ELBOW DETAIL
NOT TO SCALE

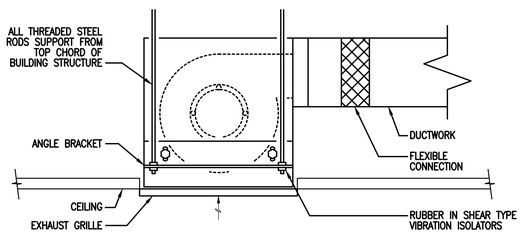

CEILING MOUNTED CABINET EXHAUST FAN DETAIL
NO SCALE

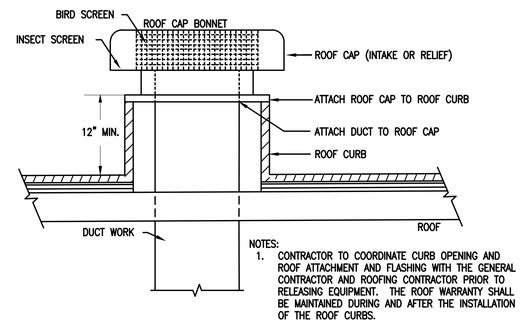

NOTES:
1. CONTRACTOR TO COORDINATE CURB OPENING AND ROOF ATTACHMENT AND FLASHING WITH THE GENERAL CONTRACTOR AND ROOFING CONTRACTOR PRIOR TO RELEASING EQUIPMENT. THE ROOF WARRANTY SHALL BE MAINTAINED DURING AND AFTER THE INSTALLATION OF THE ROOF CURBS.

ROOF CAP (INTAKE) PENETRATION DETAIL
NO SCALE

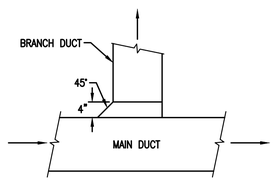

DETAIL – BRANCH DUCT CONNECTION
NO SCALE

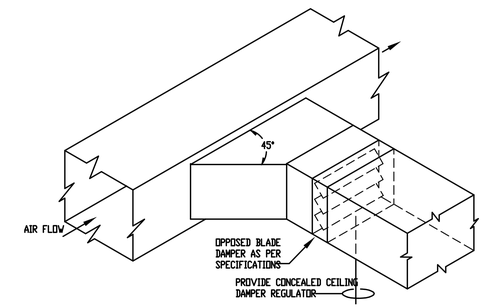

BRANCH DUCT TAKE-OFF @ SUPPLY MAIN
NOT TO SCALE

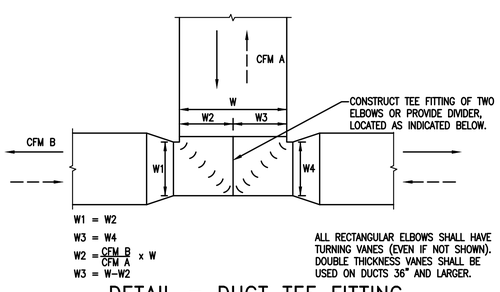

W1 = W2
W3 = W4
$W2 = \frac{CFM\ B}{CFM\ A} \times W$
W3 = W-W2

ALL RECTANGULAR ELBOWS SHALL HAVE TURNING VANES (EVEN IF NOT SHOWN). DOUBLE THICKNESS VANES SHALL BE USED ON DUCTS 36" AND LARGER.

DETAIL – DUCT TEE FITTING
NO SCALE

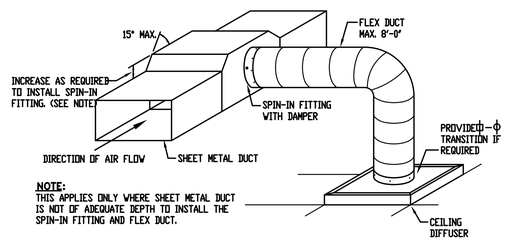

NOTE:
THIS APPLIES ONLY WHERE SHEET METAL DUCT IS NOT OF ADEQUATE DEPTH TO INSTALL THE SPIN-IN FITTING AND FLEX DUCT.

FLEX DUCT TAKE-OFF @ SHEET METAL DUCT DETAIL
NOT TO SCALE

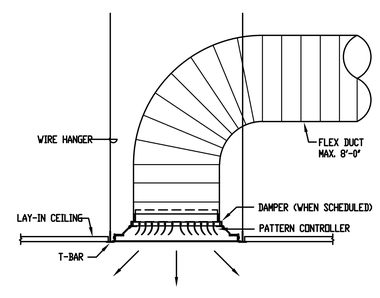

LAY-IN CEILING DIFFUSER DETAIL
NOT TO SCALE

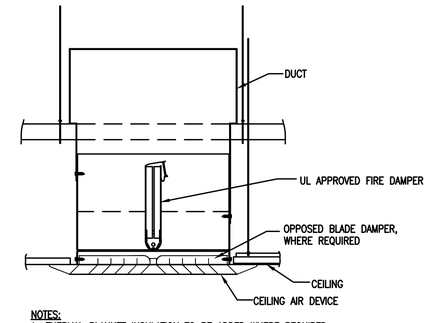

NOTES:
1. THERMAL BLANKET INSULATION TO BE ADDED WHERE REQUIRED.
2. DIFFUSER, OPPOSED BLADE DAMPER, FIRE DAMPER AND DUCTWORK TO BE SECURELY SUPPORTED.
3. INSTALLATION OF ALL FIRE DAMPERS SHALL BE IN ACCORDANCE WITH MANUFACTURER'S UL APPROVED METHODS.
4. PROVIDE ACCESS DOOR IN DUCTWORK AS NEAR FIRE DAMPER AS POSSIBLE FOR INSPECTION AND RESET OF FIRE DAMPER. LOCATION MAY VARY TO SUIT FIELD CONDITIONS.

CEILING FIRE DAMPER
NOT TO SCALE

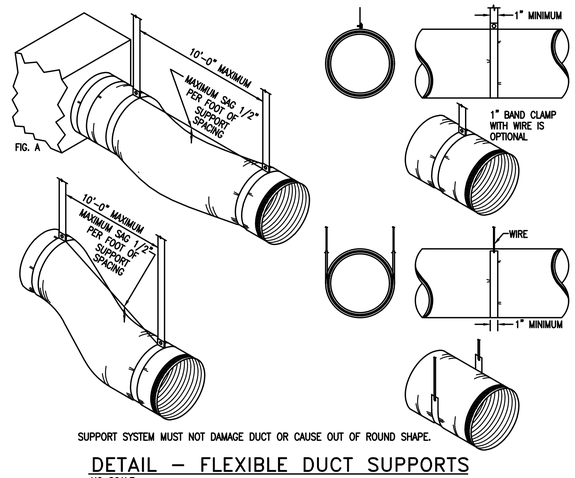

SUPPORT SYSTEM MUST NOT DAMAGE DUCT OR CAUSE OUT OF ROUND SHAPE.

DETAIL – FLEXIBLE DUCT SUPPORTS
NO SCALE

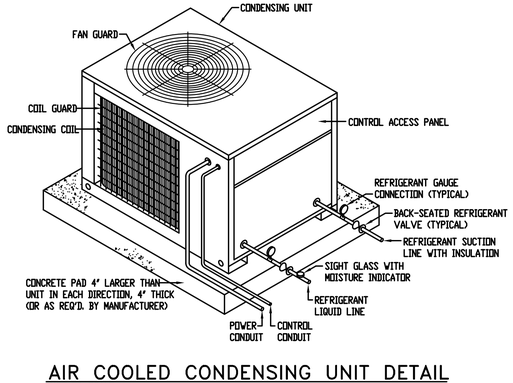

AIR COOLED CONDENSING UNIT DETAIL
NOT TO SCALE

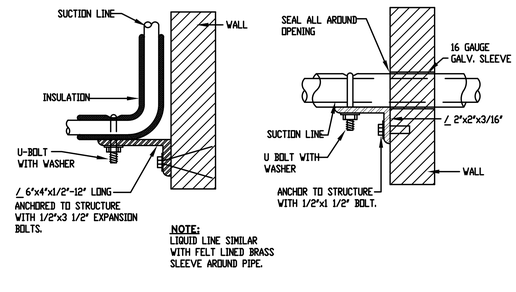

NOTE:
LIQUID LINE SIMILAR WITH FELT LINED BRASS SLEEVE AROUND PIPE.

REFRIGERANT PIPE SUPPORTS AT WALL
NOT TO SCALE

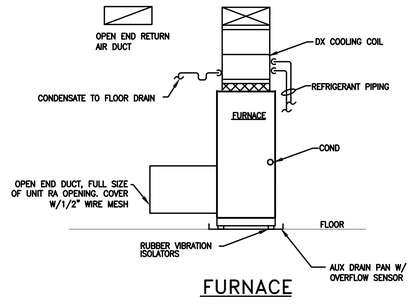

FURNACE INSTALLATION DETAIL
NOT TO SCALE

S. HOYT WILLIAMS PE, LLC
10714 ROCK ARBOR WAY, KNOXVILLE TN. 37922
423 914 5601
MECHANICAL ELECTRICAL & PLUMBING ENGINEERING
SHWILLIAMSPE@GMAIL.COM

COMMONWEALTH OF VIRGINIA
MELINDA D. RUBLE
No. 028163
05.17.2024
PROFESSIONAL ENGINEER

No.	Date	Revision
	03.29.24	95% REVIEW SET
	05.17.24	PERMIT & BID SET

MOUNT RODGERS PLACE
BRISTOL, VIRGINIA
180 Bristol East Road - Bristol, Virginia 24201

MECHANICAL DETAILS

Date	03.29.24
Scale	AS INDICATED
Designed By	
Drawn By	
Checked By	
Project Number	
Sheet	M-4

ELECTRICAL LEGEND

	LED LIGHT FIXTURES
EM a	2'X4' LIGHT FIXTURES, NEW WORK LED LIGHT FIXTURES, 'EM' INDICATES INTEGRAL BATTERY BALLAST; LOWER CASE 'a' DENOTES LIGHTING ZONE.
EM	2'X2' LIGHT FIXTURES, NEW WORK LED LIGHT FIXTURES, 'EM' INDICATES INTEGRAL BATTERY BALLAST
	DECORATIVE LANTERN STYLE WALL SCONCE
	WALL PACK, FLOOD STYLE
EX	EXIT LIGHTING FIXTURE, SURFACE CEILING MOUNTED, DIRECTIONAL ARROWS AS INDICATED. ' EX' INDICATES EXISTING TO REMAIN.
	QUAD-PLEX WALL RECEPTACLE
	120V QUAD OUTLET, FLOOR BOX
E	DUPLEX WALL RECEPTACLE, MOUNTING HEIGHT = 1'-6", EXCEPT 'C' SUBSCRIPT INDICATES MOUNTING IN CASEWORK(TYP). 'GFI' SUBSCRIPT INDICATES GROUND FAULT, 'M' SUBSCRIPT INDICATES RECEPTACLE MOUNTED BEHIND MIRROR, 'EWC' SUBSCRIPT INDICATES GROUND FAULT BEHIND ELECTRIC WATER COOLER. '*' INDICATES MOUNTED HEIGHT = 8" ABOVE COUNTER(TYP).
	120V DUPLEX DEDICATED WALL RECEPTACLE
	220V SINGLE OUTLET WALL RECEPTACLE
	LOW VOLTAGE
OS	OCCUPANCY SENSOR, DUAL TECHNOLOGY
F	FIRE ALARM PULL STATION
F	FIRE ALARM HORN/STROBE COMBO
S	FIRE ALARM HEAT DETECTOR
H	FIRE ALARM SMOKE DETECTOR
	FIRE ALARM STROBE

	CONDUCTORS IN CONDUIT CONCEALED IN CEILING OR WALL.
	BRANCH CIRCUIT HOME RUN TO PANELBOARD. NOTATION INDICATES PANELBOARD & BRANCH CIRCUIT CONNECTION.
	CONDUCTORS IN CONDUIT CONCEALED IN SLAB OR BELOW GRADE.
S	SINGLE-POLE SWITCH, MOUNTING HEIGHT = 4'-0" TO TOP. LOWER CASE SUBSCRIPT WHEN USED, INDICATES FIXTURES CONTROLLED (TYP).
S_3	THREE-WAY SWITCH, MOUNTING HEIGHT = 4'-0" TO TOP.
S_{OS}	INTEGRAL OCCUPANCY SENSOR SWITCH, MOUNTING HEIGHT = 4'-0" TO TOP.
	COMBINATION PHONE OUTLET AND DATA OUTLET. DATA SYSTEM OUTLET, MOUNTING HEIGHT = 1'-6" UNLESS INDICATED OTHERWISE. PROVIDE 1' CONDUIT FROM BOX TO ABOVE ACCESSIBLE CEILING WITH PULL CORD. WHERE MOUNTED BESIDE COUNTER RECEPTACLE: MOUNT SAME HEIGHT AS RECEPTACLE.
D_a	DIMMER SWITCH, MOUNTING HEIGHT = 4'-0" TO TOP, 'a' LOWER CASE SUBSCRIPT INDICATES FIXTURES CONTROLLED WITH THIS SWITCH
	PANELBOARD, 208Y/120-VOLT, 3-PHASE, 4-WIRE, MOUNTING HEIGHT=6'-0" TO TOP. SEE PANELBOARD SCHEDULES.
	DISCONNECT SWITCH, EXTERNALLY OPERATED, 240V, 3 ø UNLESS OTHERWISE NOTED. NOTATION INDICATES NUMBER OF POLES AND AMPERAGE CAPACITY. 'NF' SUBSCRIPT INDICATES NON FUSED.
WAP	WIRELESS ACCESS POINT, QUAD DATA BOX WITH 1" CONDUIT STUBBED TO ABOVE ACCESSIBLE CEILING WITH PULL CORD
DC	DOOR CONTACT
CR	CARD READER
PC	PULL CORD
NC	NURSE STATION CALL LIGHT
PB	PUSH BUTTON ADA DEVICE

LIGHTING FIXTURE SCHEDULE

MARK	MANUFACTURER	MODEL NUMBER	INPUT VOLTAGE	LAMPS WATTS	LAMPS TYPE	MNTG.	REMARKS
A	LITHONIA LIGHTING	CPX 2X4 AL08 SWW7	MVOLT	39	LED		2X4 FLAT PANEL, WITH INTEGRAL BATTERY WHERE INDICATED
B	LITHONIA LIGHTING	CPX 2X2 AL07 SWW7	MVOLT	32	LED		2X2 FLAT PANEL, WITH INTEGRAL BATTERY WHERE INDICATED
C	LITHONIA LIGHTING	CPX 1X4 AL07 SWW7	MVOLT	32	LED		1X4 FLAT PANEL, WITH INTEGRAL BATTERY WHERE INDICATED
D	LITHONIA LIGHTING	WF6 LED 30K MW	MVOLT	12.6	LED		6" DOWNLIGHT,WITH INTEGRAL BATTERY WHERE INDICATED
E	LITHONIA LIGHTING	WPX1 4000K 2900 LM (24W) DDBXD	MVOLT	24	LED		EXTERIOR WALL SCONCE, WITH INTEGRAL BATTERY BALLAST
EXIT	LITHONIA LIGHTING	LQM W R EL	MVOLT	32	LED	REC	EDGE LIT LED, EXIT LIGHT, RED LETTERS ON CLEAR FACE. PROVIDE CHEVRONS AS NEEDED. NICKEL CADMIUM BATTERY.

* NOTE: ALL LAMPS AND LED FIXTURES ARE TO BE 4000 KELVIN COLOR TEMPERATURE

SHEET INDEX

E1.0 GENERAL NOTES, LEGEND, LIGHTING FIXTURE SCHEDULE
E2.0 LIGHTING PLAN
E3.0 POWER AND DATA PLAN
E4.0 MECHANICAL AND SYSTEMS PLANS
E5.0 PANEL SCHEDULES, RISER DIAGRAM
E6.1 ELECTRICAL SPECIFICATIONS
E6.2 ELECTRICAL SPECIFICATIONS

S. HOYT WILLIAMS PE, LLC
10714 ROCK ARBOR WAY
KNOXVILLE TN. 37922
423 914 5601
MECHANICAL ELECTRICAL & PLUMBING ENGINEERING
SHWILLIAMSPE@GMAIL.COM

COMMONWEALTH OF VIRGINIA
DANIEL W. GIBSON
Lic. No. 44271
5/17/24
PROFESSIONAL ENGINEER

04.04.24	95% REVIEW SET
05.17.24	BID/PERMIT PLAN SET

MOUNT RODGERS PLACE
BRISTOL, VIRGINIA
180 Bristol East Road - Bristol, Virginia 24201

ELECTRICAL LEDGEND AND LIGHTING FIXTURE SCHEDULE

Date 04.04.24
Scale
Project Number
Sheet
E-1.0

CEILING FAN TO BE BASED ON 150 WATT MOTOR. FAN SIZE AND MANUFACTURE TO BE SELECTED BY OWNER. COORDINATE SELECTION DURING CONSTRUCTION. PROVIDE INDIVIDUAL FAN CONTROLS TO CONTROL FANS SPEED. COORDINATE WITH OWNER FOR FAN CONTROL LOCATION

NOTES THIS SHEET:

1. PROVIDE MULTILEVEL, DIMMER/PRESENT SWITCHES TO CONTROL LIGHTS IN ADC AREA. LIGHTING TO BE DIVIDED INTO FOUR SEPARATE ZONES, INDICATED BY LOWER CASE LETTER. SET CONTROL LEVELS AT 100%, 70%, AND 30%. AND OFF. VERIFY LEVELS WITH OWNER, COORDINATE EXACT LOCATION OF SWITCHES WITH OWNER.
2. SOFFIT LIGHTS TO BE REPLACED ONE FOR ONE. PROVIDE NEW CIRCUIT TO PANEL B CIRCUIT 42. PROVIDE A PHOTOCELL AND TIME CLOCK TO CONTROL EXTERIOR LIGHTS AND SIGNS.

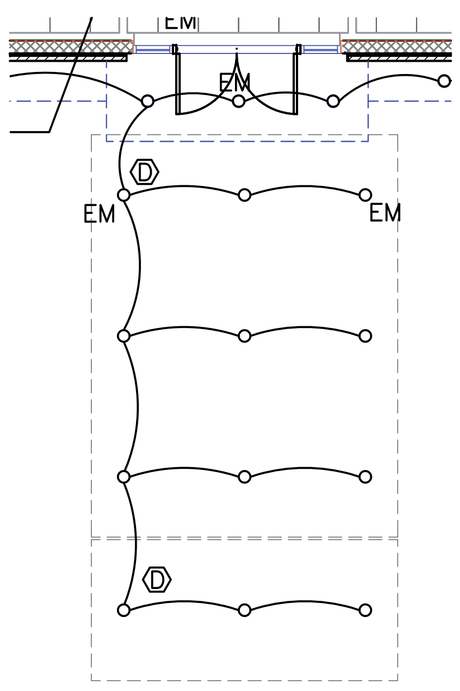

LIGHTING PLAN: CANOPY
SCALE: 3/16" = 1'-0"

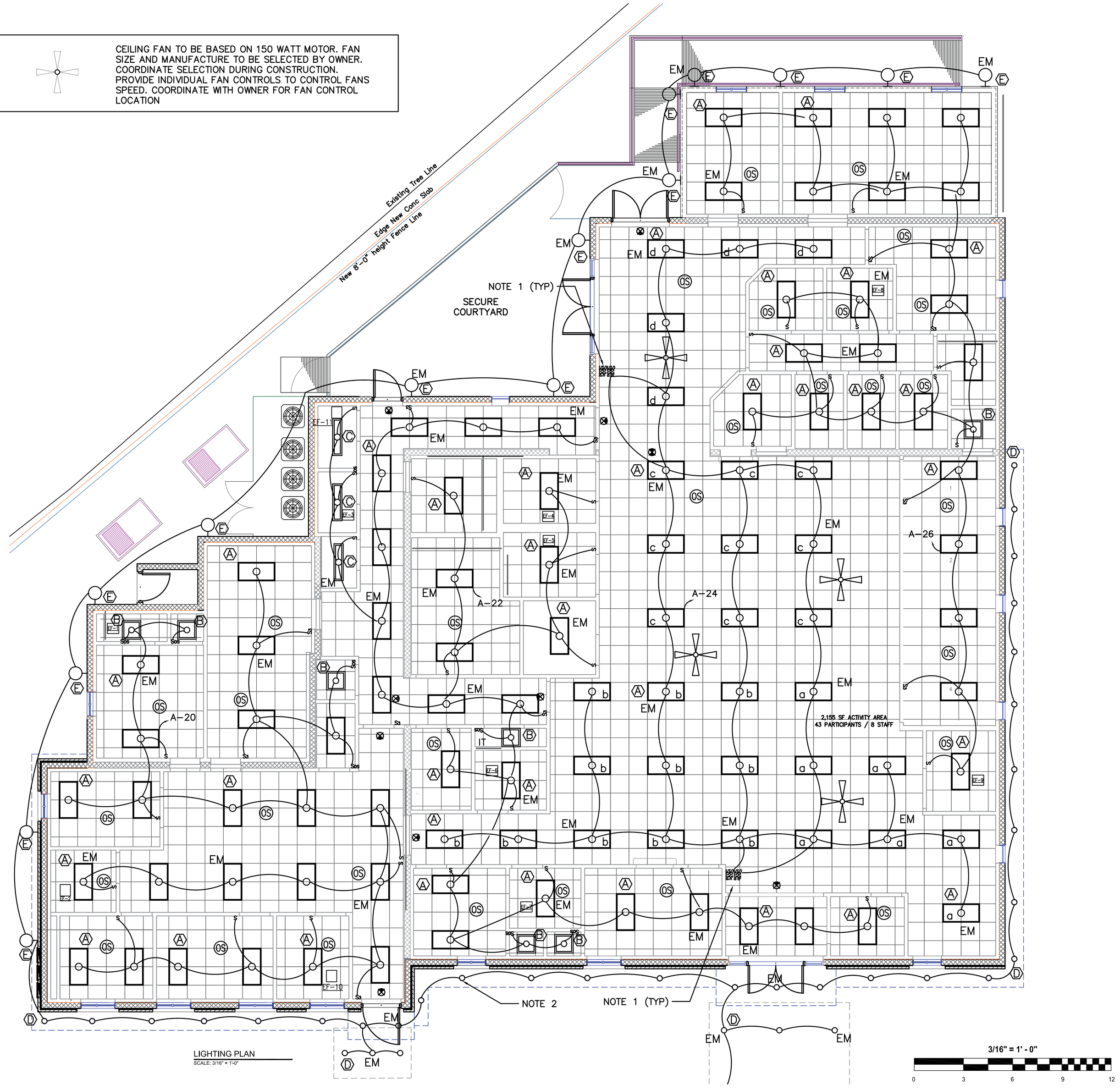

LIGHTING PLAN
SCALE: 3/16" = 1'-0"

3/16" = 1' - 0"
0 3 6 9 12

S. HOYT WILLIAMS PE, LLC
10714 ROCK ARBOR WAY
KNOXVILLE TN. 37922
423 914 5601
MECHANICAL ELECTRICAL & PLUMBING ENGINEERING
SHWILLIAMSPE@GMAIL.COM

COMMONWEALTH OF VIRGINIA
DANIEL W. GIBSON
Lic. No. 44271
5/17/24
PROFESSIONAL ENGINEER

Date	Description
04.04.24	95% REVIEW SET
05.17.24	BID/PERMIT PLAN SET

MOUNT RODGERS PLACE
BRISTOL, VIRGINIA
180 Bristol East Road - Bristol, Virginia 24201

LIGHTING PLAN

Date 04.04.24
Scale
Project Number
Sheet E-2.0

OWNER SCOPE

1. OWNER TO SET GENERATORS IN THE LOCATION SHOWN, CONTRACTOR TO BE RESPONSIBLE FOR CONNECTING UP TO OPERATE AS DESIGNED.
2. OWNER TO PROVIDE NEW SERVICE TO BUILDING AND SERVICE TO AND INSTALLATION OF 200 AMP MAIN PANELS IN ELECTRICAL ROOM.
3. CONTRACTOR TO INSTALL 100 AMP DISCONNECT FOR OFFICE TRAILER.
4. CONTRACTOR TO PROVIDE ALL BRANCH CIRCUITS INDICATED.
5. ALL OTHER EXISTING ELECTRICAL TO BE REMOVED BY OWNER.

GENERAL NOTES THIS SHEET:

1. CARD READERS TO BE DEACTIVATED IN THE EVENT OF AN ALARM.
2. OWNER SHALL BE RESPONSIBLE FOR ALL WORK INSIDE TRAILER AND FINAL CONNECTIONS.
3. GENERATOR FURNISHED BY OWNER. CONTRACTOR RESPONSIBLE FOR INSTALLATION, FINAL CONNECTIONS, AND TESTING.

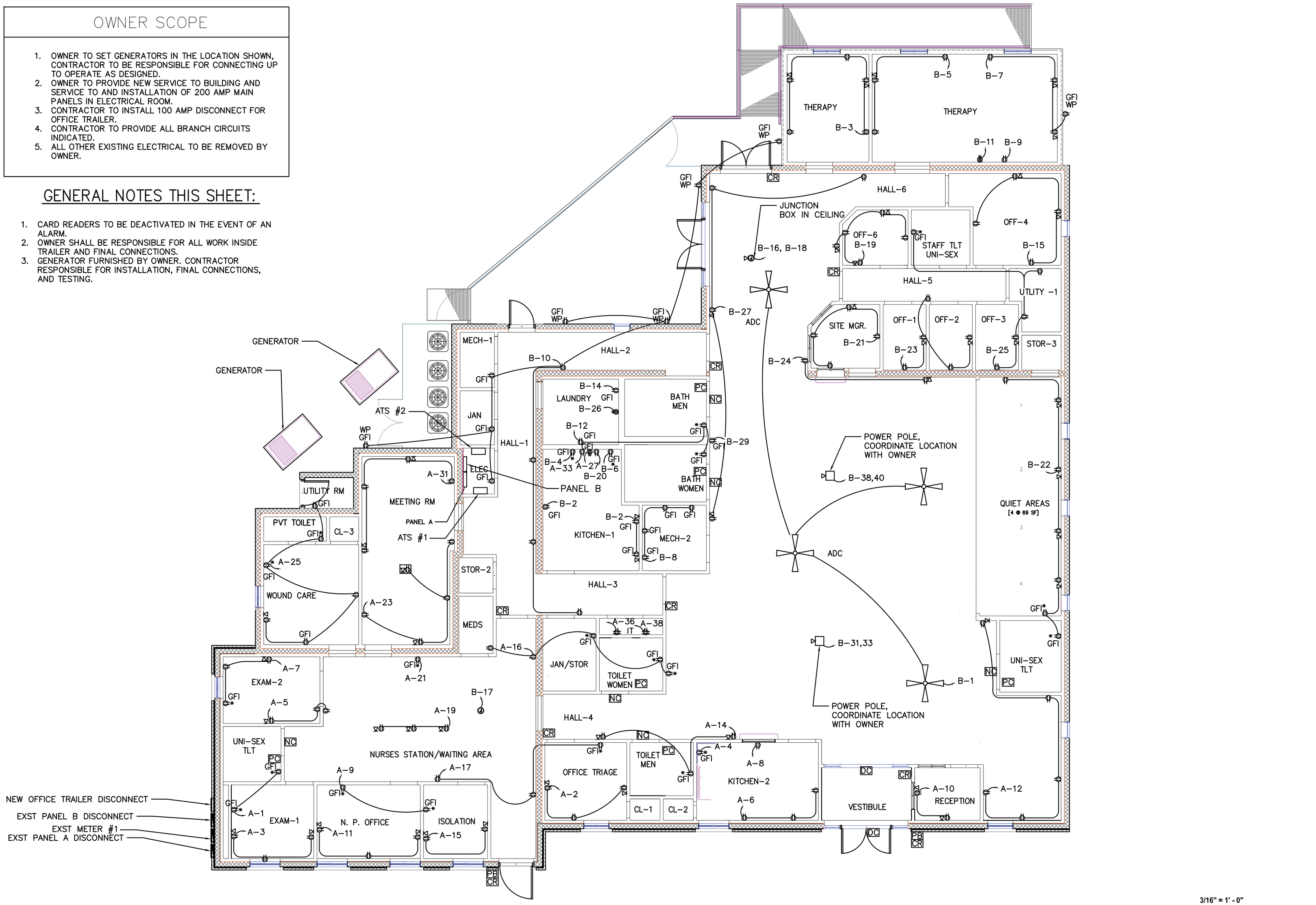

POWER AND DATA PLAN
SCALE: 3/16" = 1'-0"

3/16" = 1' - 0"
0 3 6 9 12

S. HOYT WILLIAMS PE, LLC
10714 ROCK ARBOR WAY
KNOXVILLE TN. 37922
423 914 5601
MECHANICAL ELECTRICAL & PLUMBING ENGINEERING
SHWILLIAMSPE@GMAIL.COM

COMMONWEALTH OF VIRGINIA
DANIEL W. GIBSON
Lic. No. 44271
5/17/24
PROFESSIONAL ENGINEER

04.04.24	95% REVIEW SET	
05.17.24	BID/PERMIT PLAN SET	

MOUNT RODGERS PLACE
BRISTOL, VIRGINIA
180 Bristol East Road - Bristol, Virginia 24201

POWER AND DATA PLAN

Date 04.04.24
Scale
Project Number
Sheet E-3.0

OWNER SCOPE

1. OWNER TO INSTALL ALL SECURITY DEVICES. PROVIDE JUNCTION BOXES WITH CONDUIT TO ABOVE CEILING WHERE INDICATED FOR ACCESS.

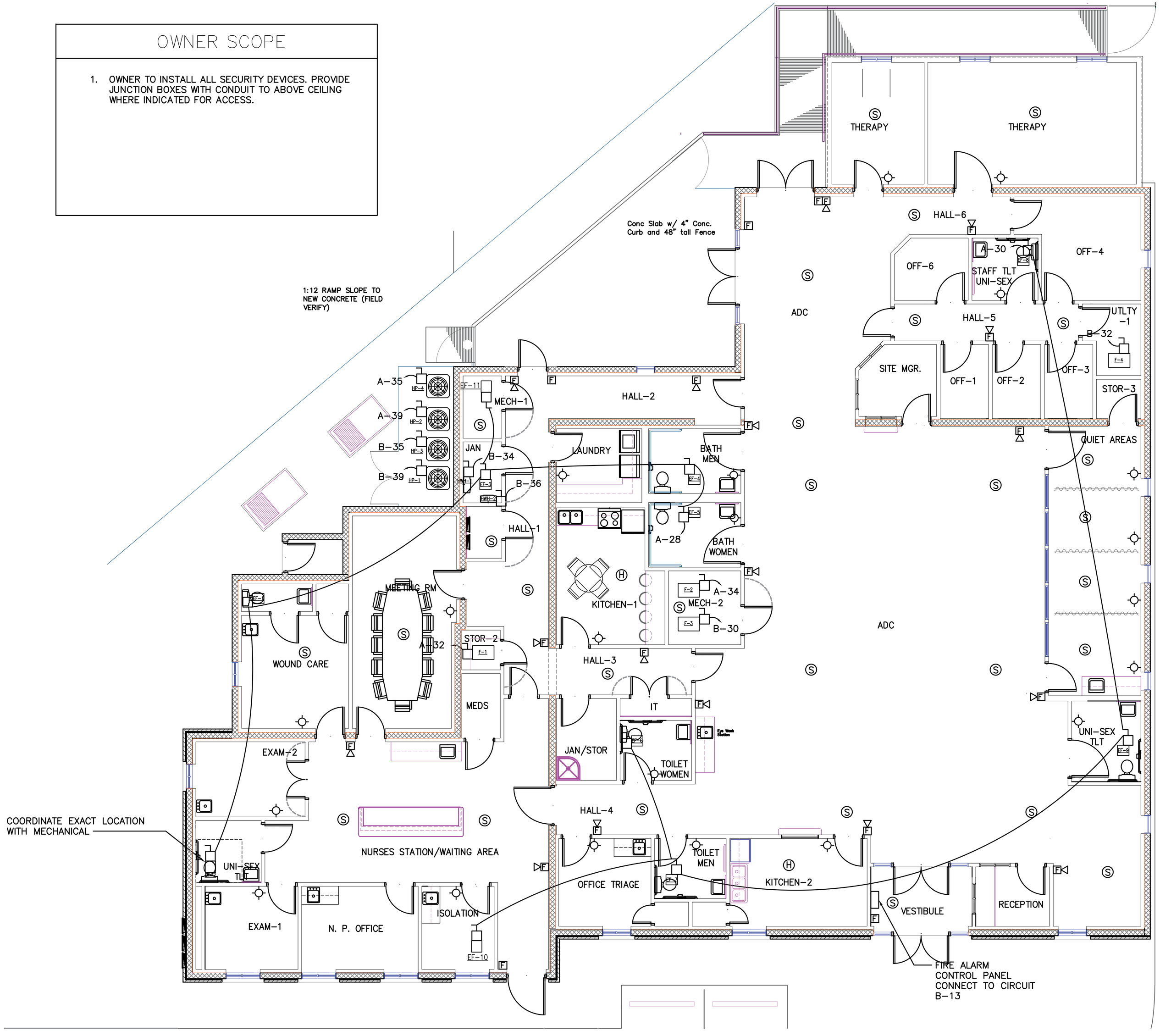

MECHANICAL PLAN
SCALE: 3/16" = 1'-0"

3/16" = 1' - 0"
0 3 6 9 12

S. HOYT WILLIAMS PE, LLC
10714 ROCK ARBOR WAY
KNOXVILLE TN. 37922
423 914 5601
MECHANICAL ELECTRICAL & PLUMBING ENGINEERING
SHWILLIAMSPE@GMAIL.COM

COMMONWEALTH OF VIRGINIA
DANIEL W. GIBSON
Lic. No. 44271
5/17/24
PROFESSIONAL ENGINEER

04.04.24	95% REVIEW SET	
05.17.24	BID/PERMIT PLAN SET	

MOUNT RODGERS PLACE
BRISTOL, VIRGINIA
180 Bristol East Road - Bristol, Virginia 24201

MECHANICAL AND FIRE ALARM PLAN

Date 04.04.24
Scale
Project Number
Sheet
E-4.0

PANEL A

VOLTAGE: 120/240V | PHASE: 1 | WIRE: 3 | BUS AMPS: 200A | MAIN BREAKER AMPS: 200A | [X] SURFACE MOUNTED | [ ] FLUSH MOUNTED | kAIC RATING: 22,000

CKT NO.	BRKR P	BRKR AMPS	WIRE NO	WIRE SZ	*	CIRCUIT DESCRIPTION	LOAD - KVA PHA	PHB	PHC	3 PH	CKT NO.	BRKR P	BRKR AMPS	WIRE NO	WIRE SZ	*	CIRCUIT DESCRIPTION	LOAD - KVA PHA	PHB	PHC	3 PH
1	1	20	2	12		EXAM 1, RR	0.4				2	1	20	2	12		OFFICE TRIAGE	0.5			
3	1	20	2	12		EXAM 1		0.5			4	1	20	2	12		KITCHEN-2 FRIDGE		0.2		
5	1	20	2	12		EXAM 2	0.5				6	1	20	2	12		KITCHEN-2	0.5			
7	1	20	2	12		EXAM 2		0.5			8	1	20	2	12		KITCHEN-2		0.2		
9	1	20	2	12		NP, ISOLATION	0.4				10	1	20	2	12		RECEPTION	0.4			
11	1	20	2	12		NP OFFICE		0.5			12	1	20	2	12		RECEPTION WAITING		0.9		
13	1	20	2	12	1	FIRE ALARM	0.4				14	1	20	2	12		HALL-4, RR, ADC	0.5			
15	1	20	2	12		ISOLATION		0.4			16	1	20	2	12		JANITOR, RR		0.5		
17	1	20	2	12		WAITING, TRIAGE	0.5				18	1	20	2	12		ADC SINK	0.2			
19	1	20	2	12		NURSE STA		0.5			20	1	20	2	10		INTERIOR LTS		1.0		
21	1	20	2	12		STATION SINK	0.2				22	1	20	2	10		INTERIOR LTS	1.1			
23	1	20	2	12		MEETING RM		0.9			24	1	20	2	10		INTERIOR LTS		1.2		
25	1	20	2	12		WOUND CARE, RR	0.4				26	1	20	2	10		INTERIOR LTS	1.0			
27	2	50	3	8		RANGE		5.0			28	1	20	2	12		EF-1, 2, 3, 4, 5		0.1		
29							5.0				30	1	20	2	12		EF-6, 7, 8, 9	0.1			
31	1	20	2	12		MEETING RM		0.7			32	1	20	2	12		F-1		1.5		
33	1	30	2	10		MW	2.0				34	1	20	2	12		F-2	1.5			
35	2	60	3	6		CU-1	2.6	2.6			36	1	20	2	12		IT RCPT				
37											38	1	20	2	12		IT RCPT				
39	2	60	3	6		CU-2	2.6	2.6			40	1	20		12		SPARE		1.0		
41											42	1	20				SPARE				
						TOTAL LEFT SIDE	14.9	14.2	0.0	0.0							TOTAL RIGHT SIDE	5.8	6.6	0.0	0.0
						TOTAL RIGHT SIDE	5.8	6.6	0.0	0.0											
						TOTAL	20.8	20.8	0.0	0.0							TOTAL CONNECTED LOAD				41.6

* NOTES
1. PROVIDE A RED BREAKER WITH LOCK ON DEVICES.

PANEL B

VOLTAGE: 120/240V | PHASE: 1 | WIRE: 3 | BUS AMPS: 200A | MAIN BREAKER AMPS: 200A | [X] SURFACE MOUNTED | [ ] FLUSH MOUNTED | kAIC RATING: 22,000

CKT NO.	BRKR P	BRKR AMPS	WIRE NO	WIRE SZ	*	CIRCUIT DESCRIPTION	LOAD - KVA PHA	PHB	PHC	3 PH	CKT NO.	BRKR P	BRKR AMPS	WIRE NO	WIRE SZ	*	CIRCUIT DESCRIPTION	LOAD - KVA PHA	PHB	PHC	3 PH
1	1	20	2	12		CEILING FANS	0.6				2	1	20	2	12		KITCHEN-1	0.5			
3	1	20	2	12		THERAPY, HALL-6		0.9			4	1	20	2	12		KITCHEN-1 SINK		0.2		
5	1	20	2	12		THERAPY	0.5				6	1	20	2	12		KITCHEN-1 FRIDGE	0.2			
7	1	20	2	12		THERAPY		0.5			8	1	20	2	12		MECH-2		0.8		
9	1	20	2	12		THERAPY WASHER	0.2				10	1	20	2	12		HALL 2	0.8			
11	2	30	2	10		THERAPY DRYER		2.5			12	1	20	2	12		LAUNDRY, RR		0.5		
13							2.5				14	1	20	2	12		LAUNDRY WASHER	0.2			
15	1	20	2	12		OFF-4		0.7			16	1	20	2	12		ADC CLG JBOX		0.2		
17	1	20	2	12		NU STA CLG JBOX	0.2				18	1	20	2	12		ADC CLG JBOX	0.2			
19	1	20	2	12		OFF-6, ADC		0.5			20	1	20	2	12		RANGE HOOD		0.2		
21	1	20	2	12		SITE MGR	0.7				22	1	20	2	12		QUIET AREA, STOR-3	1.3			
23	1	20	2	12		OFF-1, OFF-2		0.9			24	1	20	2	12		ADC		0.4		
25	1	20	2	12		OFF-3, UTILY.RR	0.9				26	2	30	3	10		LAUNDRY DRYER	2.5			
27	1	20	2	12		ADC		0.7			28								2.5		
29	1	20	2	12		ADC WTR FTN	0.2				30	1	20	2	12		F-3	1.5			
31	1	20	2	12		ADC PWR POLE		1.0			32	1	20	2	12		F-4		1.5		
33	1	20	2	12		ADC PWR POLE	1.0				34	1	20	2	12		HWH-1	1.0			
35	2	60		6		CU-3	2.6	2.6			36	1	20	2	12		HWH-2		1.0		
37											38	1	20	2	12		ADC PWR POLE	1.0			
39	2	60		6		CU-4	2.6	2.6			40	1	20	2	12		ADC PWR POLE		1.0		
41											42	1	20	2	10		SOFFIT & CANPY LTS	1.0			
						TOTAL LEFT SIDE	12.0	12.9	0.0	0.0							TOTAL RIGHT SIDE	10.2	8.2	0.0	0.0
						TOTAL RIGHT SIDE	10.2	8.2	0.0	0.0											
						TOTAL	22.2	21.2	0.0	0.0							TOTAL CONNECTED LOAD				43.4

* NOTES

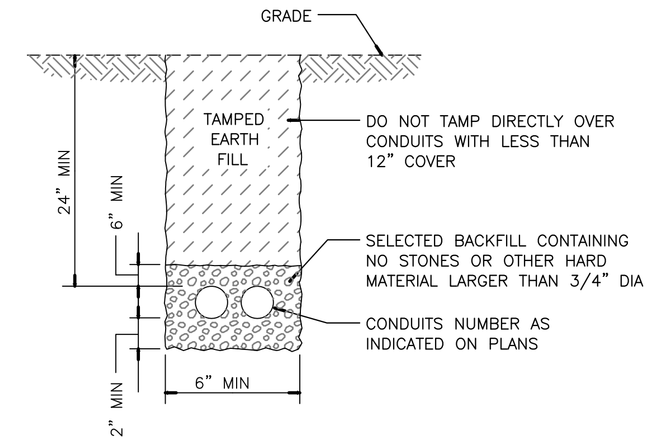

UNDERGROUND NON-ENCASED CONDUIT DETAIL

NO SCALE

ONE-LINE LEGEND

- CIRCUIT BREAKER
- PANELBOARD
- FEEDER
- TRANSFER SWITCH
- GENERATOR
- FUSED DISCONNECT

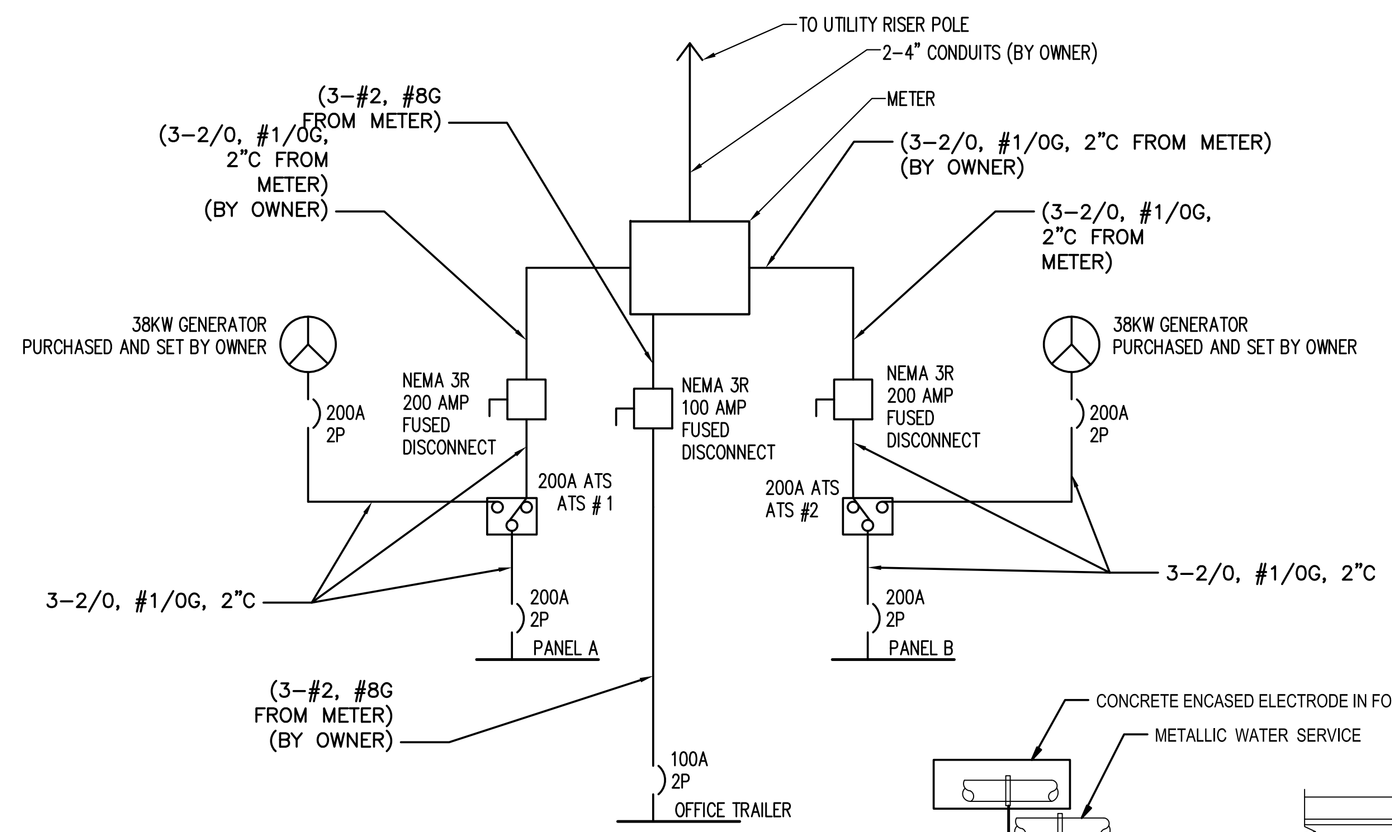

ONE-LINE DIAGRAM

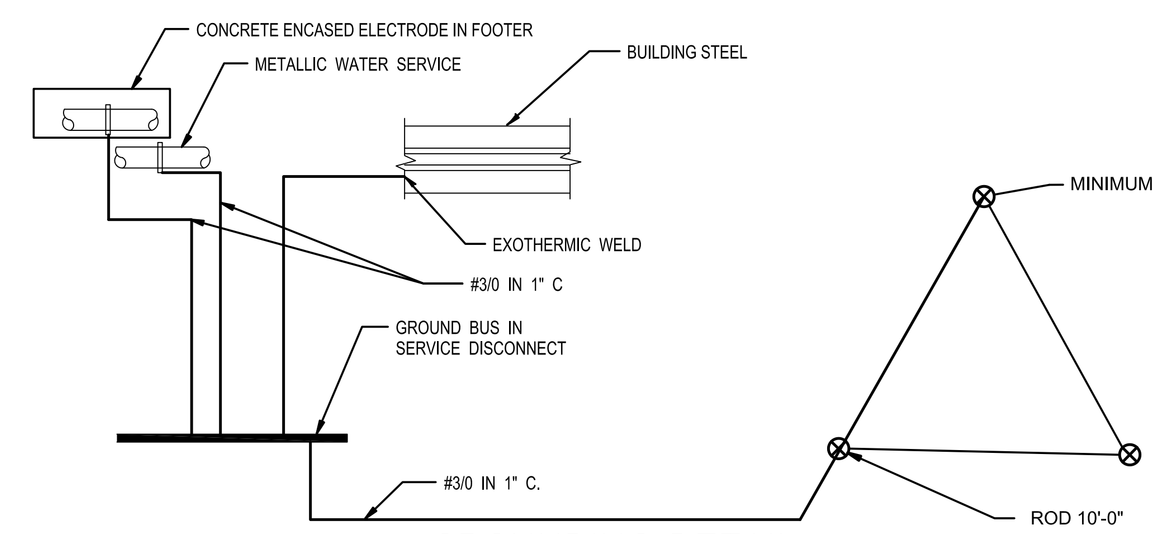

GROUNDING DETAIL

S. HOYT WILLIAMS PE, LLC
10714 ROCK ARBOR WAY, KNOXVILLE TN. 37922
423 914 5601
MECHANICAL ELECTRICAL & PLUMBING ENGINEERING
SHWILLIAMSPE@GMAIL.COM
COMMONWEALTH OF VIRGINIA DANIEL W. GIBSON Lic. No. 44271 5/17/24 PROFESSIONAL ENGINEER

04.04.24	95% REVIEW SET
05.17.24	BID/PERMIT PLAN SET

MOUNT RODGERS PLACE
BRISTOL, VIRGINIA
180 Bristol East Road - Bristol, Virginia 24201

PANEL SCHEDULES, ONE LINE DIAGRAM, AND GROUNDING DETAIL

Date 04.04.24
Scale
Project Number
Sheet E-5.0

SECTION 16000

ELECTRICAL SPECIFICATIONS

PART 1 - GENERAL

1.1 DESCRIPTION OF WORK

Provide new lighting, power, data and low voltage systems as indicated on the plans.

1.2 QUALITY ASSURANCE

A. General

a. Comply with IEEE C2, "National Electrical Safety Code".

b. IEEE Compliance: Comply with applicable Institute of Electrical and Electronics Engineers, Inc. standards pertaining to generator construction.

c. NEC Compliance: Comply with NFPA 70, "National Electrical Code" as applicable to construction and installation of products required in this specification.

d. UL and NEMA Compliance and Labeling: Provide products which have been labeled by Underwriters Laboratories and have been certified to comply with UL requirements.

e. IEEE Compliance: Comply with STD 241, "IEEE Recommended Practice for Electrical Power Systems in Commercial Buildings" pertaining to communication systems.

B. MOTOR CONTROLLERS

a. UL and NEMA Compliance and Labeling: Provide products which have been labeled by Underwriters' Laboratories and have been certified to comply with UL and NEMA.

C. LIGHTING

a. NEMA Compliance: Comply with applicable requirements of NEMA Stds. Pub/No.'s LE 1 and LE 2 pertaining to lighting equipment.

b. UL Compliance: Comply with UL standards, including UL 486A and B, pertaining to lighting fixtures. Provide lighting fixtures and components which are UL_listed and labeled. Provide exterior fixtures with "Suitable for Wet Location" label.

1.3 COORDINATION OF ELECTRICAL WORK

A. General: Refer to the division sections for general coordination requirements applicable to the entire work. It is recognized that the contract documents are diagrammatic in showing certain physical relationships which must be established within the electrical work and in its interface with other work including utilities and mechanical work and that such establishment is the exclusive responsibility of the Contractor.

a. Arrange electrical work in a neat, well organized manner with conduit and similar services running parallel with primary lines of the building construction and with the maximum headroom possible, but a minimum 7'_0" overhead clearance.

b. Locate operating and control equipment properly to provide easy access and arrange entire electrical work with adequate access for operation and maintenance.

c. Advise other trades of openings required in their work for the subsequent move_in of large units of electrical equipment.

d. Coordinate all work, including power outages, with Owner's Schedule of Operation.

B. Product Handling: Space at the project for STOR. of materials and products is limited. Coordinate the deliveries of electrical materials and products with the scheduling and sequencing of the work so that STOR. requirements at the project are minimized. In general, do not deliver individual items of electrical equipment to the project substantially ahead of the time of installation.

1.3 ELECTRICAL SYSTEM IDENTIFICATION

A. Conduit Systems: Provide adequate marking of primary conduits which are exposed or concealed in accessible spaces. to distinguish each run as either a power or signal/communication conduit. Except as otherwise indicated, use orange banding with black lettering. Provide self_adhesive or snap_on type plastic markers. Indicate voltage ratings of conductors where above 240 V. Locate markers at ends of conduit runs, near switches and other control devices and near items of equipment served by the conductors. Switch_leg conduit and short branches for power connections need not be marked, except where conduit is larger than 1 inch. Label all junction boxes with branch circuit numbers terminated within.

B. Identification Labels and Warning Signs: Provide engraved plastic_laminate or baked enamel labels on major units of electrical equipment including switchboards, panelboards, motor controllers, disconnect switches, signal and similar systems. Label shall include equipment identification mark and voltage characteristics and shall be melamine plastic, 0.125_inch thick, white with black center core. Provide warning signs where there is hazardous exposure or danger associated with access to or operation of electrical facilities. Provide text of sufficient clarity and lettering of sufficient size, minimum 0.25 inch nominal block style, to convey adequate information at each location; mount permanently in an appropriate and effective location.

1.4 PAINTING ELECTRICAL WORK

A. General: Except as otherwise indicated, comply with the Architect for electrical_work painting. Electrical equipment shall have factory_applied painting systems which shall meet the requirements of NEMA ICS6. The work of this article shall include general field painting of electrical work.
a. Coordinate the painting with the painting of other work of a similar nature and comply with indicated color and color matching requirements. Except as otherwise indicated, paint surfaces of electrical work which would normally be painted in the application and exposure indicated.

B. Do not paint over nameplates on equipment, sliding/rotating shaft surfaces, non_ferrous hardware/accessories/trim and similar items where painting would normally be omitted.

1.5 ELECTRICAL SYSTEM PERFORMANCE

A. General: The overall system performances of electrical work are of even greater importance than the specified individual unit_of_work performances. Each unit of electrical work has been designed and specified to perform at minimum levels of output and efficiency and is intended to contribute to and be compatible with the entire system. Compatibility of actual performances by electrical system performances is the Contractor's responsibility.

B. Adjustments: Where it has been determined that electrical systems do not or will not perform in compliance with the specified performances, adjustments or corrections shall be made to the work as necessary to achieve required performances.

1.6 ELECTRICAL WORK CLOSEOUT

A. Additional Service: Perform all services not classified as routine maintenance for 12 months after project acceptance or as warranty work as described in Division 1 Section "Warranties and Bonds" when authorized in writing. Compensation for additional services must be agreed upon in writing prior to performing services.

B. Closeout Coordination: Coordinate closeout operations with closeout of mechanical systems and other power consuming equipment.

C. Record Drawings: Maintain a blue_line set of electrical contract drawings and/or shop drawings in clean, undamaged condition, for indication of major electrical equipment or concealed lines located in position other than that shown on the contract drawings. Mark_up whatever drawings are most capable of showing installed conditions accurately. In general, record every substantive installation of electrical work which previously is either not shown or shown inaccurately, specifically record the following:
a. Work concealed behind or within other work, in a nonaccessible location.
b. Main feeders with switchgear, panelboards, and control devices located, identified and numbered. This information shall be displayed in a glazed, hardwood frame, minimum two (2) feet square, near the main service disconnect.
c. Maintenance procedures and schedules.
d. Testing procedures and acceptable parameters.

G. Cleaning and Lubrication: After final testing of each electrical system, clean system both externally and internally. Comply with manufacturer's instructions for lubrication of both power and hand operated equipment. Touch_up minor damage to factory_painted finishes and provide one pint of touch-up paint for each color of major equipment installed.

1.10 SUBMITTALS

A. LIGHTING

1. Product Data: Submit manufacturer's product data and installation instructions on each type building lighting fixture photocell, contactor and component.

2. Shop Drawings: Submit fixture shop drawings where specifically indicated in booklet form with separate sheet for each fixture, assembled in "luminare type" alphabetical or numerical order, with proposed fixture and accessories clearly indicated on each sheet.

3. Maintenance Data: Submit maintenance data and parts list for each lighting fixture and accessory; including "trouble_shooting" maintenance guide. Include that data, product data, and shop drawings in a maintenance manual.

PART 2 - PRODUCTS

2.1 CABLE AND WIRE

A. Provide factory-fabricated wire or cable of the size, rating, material and type as indicated for each service in compliance with NECA - Standard of Installation. Where not indicated, provide proper selection as determined by the work requiring the installation to comply with NEC standards. Conductors shall be rated 600 volt of insulation type THW, THWN, THHN, or USE installed in compliance with National Electrical Code requirements.

B. Provide bonding conductors for sizes No. 8 AWG and smaller of solid bare copper per ASTM B 1, and for sizes No. 6 AWG and larger stranded bare copper per ASTM B 8.

C. No. 10 AWG and smaller diameter shall be solid copper; No. 8 AWG and larger diameter shall be stranded copper.

D. Provide color coding for service, feeder, branch, control, and signaling circuit conductors. Color shall be green for grounding conductors and white for neutrals; except where neutrals of more than one system are installed in same raceway or box, other neutral shall be white with colored (not green) stripe. Color of ungrounded conductors in different voltage systems shall be as follows:
a. 120/208 volt, 3-phase:
i. Phase A - black.
ii. Phase B - red.
iii. Phase C - blue.

E. Provide the following types of cables in NEC approved locations and applications where indicated. Provide cable UL listed for its intended use.
a. Metal clad cable: Type MC.

F. Provide UL 486A, factory-fabricated, solderless, metal connectors of the size, ampacity, rating, material, type and class as indicated for each service. Where not indicated, provide proper selection as determined by the work requiring the installation to comply with NEC standards. Provide insulating tape in compliance with UL 510.

2.2 ELECTRICAL RACEWAYS

A. Metal Conduit, Tubing and Fittings: Provide metal conduit, tubing and fittings of type, grade, size and weight indicated for each service. Where type and grade are not indicated, provide proper selection as determined by the work requiring the installation to comply with NEC standards for wiring requirements.

a. Rigid Steel Conduit: ANSI C80.1, UL 6.
b. Intermediate Steel Conduit (Zinc Coated Steel): UL 1242.
c. Rigid Metal Conduit Fittings: UL 514B, cadmium- or zinc- coated threaded type.
d. Electrical Metal Tubing (EMT): ANSI C80.3, UL 797.
e. EMT Fittings: UL 514B, compression or set-screw type
f. Flexible Metal Conduit: Cadmium- or zinc-coated steel.
g. Flexible Metal Conduit Fittings: UL 514B, cadmium- or zinc-coated.
h. Liquid-Tight Flexible Metal Conduit: UL 360, provide liquid-tight flexible metal conduit comprised of single strip, continuous, flexible, interlocked, double-wrapped steel, galvanized inside and outside; forming smooth internal wiring channel; with liquid-tight jacket of flexible polyvinyl chloride.
i. Liquid-Tight Flexible Metal Conduit Fittings: FS W-F-406.

B. Wireways: Electrical wireways shall be of types, sizes, and number of channels as indicated. Fittings and accessories including but not limited to couplings, offsets, elbows, expansion joints, adapters, hold-down straps, and end caps shall match and mate with wireway as required for complete system. Where features are not indicated, select to fulfill wiring requirements and comply with applicable provisions of NEC. Wireway covers shall be hinged type.

C. Surface Metal Raceways and Fittings: UL 5, two-piece steel, totally enclosed. Snap cover type with wiring devices, sizes and channels as indicated. Wiremold, or approved equal.
a. Type a: Two section, steel, approximately 7/8 inch x 1 1/4 inch wide, with 20 amp, 125V, specification grade grounding surge protection receptacles 2'-6" on centers, alternating circuits. Provide with ivory paintable finish.

2.3 ELECTRICAL OUTLET BOXES AND FITTINGS

A. Interior Outlet Boxes: UL 514A, provide galvanized flat rolled sheet steel interior outlet wiring boxes, flush mounted of type, shapes and sizes, including box depths, to suit each respective location and installation; construct with stamped knockouts in back and sides, and with threaded screw holes with corrosion-resistant screws for securing box covers and wiring devices. Provide feraloy cast outlet boxes where surface mounted with threaded conduit hubs to suit each respective location and installation.

B. Weatherproof Outlet Boxes: Provide corrosion-resistant cast metal weatherproof outlet wiring boxes, of types, shapes and sizes, with threaded conduit ends, cast metal face plates with spring-hinged waterproof caps suitably configured for each application, including faceplate gaskets and corrosion-resistant fasteners. Weatherproof while in operation.

C. Cast-Iron Floor Boxes: Fully adjustable, waterproof, with threaded raceway entrances, adjusting rings, gaskets, and brass floor plates. Provide multi-section boxes with individual screw type brass section covers, barrier between compartments and provide for a duplex receptacle under one or more of the covers. Telephone outlets shall have provisions to accommodate 10-wire telephone terminal block. Provide gaskets where required to ensure watertight installation. Provide trim suitable for floor conditions.

2.4 WIRING DEVICES

A. General: Provide factory-fabricated wiring devices, in types, colors and electrical ratings for applications indicated and complying with NEMA Standards Publication No. WD 1. Where types and grades are not indicated, provide proper selection as determined by installer to fulfill wiring requirements, and comply with NEC and NEMA standards for wiring devices. Provide receptacles with isolated ground and/or surge protection where indicated.

B. Receptacles:
a. Hospital Grade Duplex: UL 498, provide duplex heavy duty type receptacles, 2-pole, 3-wire grounding, with green hexagonal equipment ground screw, ground terminals and poles internally connected to mounting yoke, 20-amperes, 125 volt, ivory nylon face with metal plaster ears, side wiring, NEMA Configuration 5-20R, unless otherwise indicated.
b. Hospital Grade Ground Fault Receptacle: Provide ground fault protected duplex receptacle
i. Provide with cast aluminum weatherproof cover where indicated to be WP while in operation.

C. Switches:
a Snap: UL 20, provide general duty flush single-pole toggle switches, 20-amperes, 120-277 volts AC only, with mounting yoke insulated from mechanism, equip with plaster ears, ivory switch handle and side wired screw terminals. Single pole, Three-way and Four-way as indicated on drawings.
b. Motion Sensing, Ceiling Mounted: Provide dual technology ultrasonic and passive infrared or microphonic and passive infrared motion detector, manual off switch, 0 to 4800 watt fluorescent switching capacity, 360 sensing coverage, six to 15 minute off time delay, LED walk test indicator, bypass switch, suitable for use in classrooms, 5_year warranty, UL listed, Universal Energy Control (UNENCO) Switchomatic Coordinate with connected wattage and type of room light fixtures.

D. Wiring Device Accessories:
a. Wall Plates: Provide UL listed, one-piece device plates for outlets and fittings to fit the device installed. For flush-mounted outlets on finished walls, provide white switch and outlet plates of types, sizes and with ganging and cutouts as indicated. Install with metal screws for securing plates to devices; screw heads colored to match finish of plate.
b. For surface mounted boxes, provide feraloy cast outlet plates on all outlet boxes, type suitable for wiring device installed in box.
c. Provide plate with engraved legend where indicated.

2.5 SAFETY AND DISCONNECT SWITCHES

A. General: UL 98, NEMA KS1, provide surface-mounted, sheet-steel enclosed switches, of types, sizes and electrical characteristics indicated; 3-blades, 4-wire with amperage rating as required, 60 hertz and visible blades with door in open position. Provide with safety handle which is easily recognizable and is capable of being padlocked in the open position and operating mechanism for quick-make and quick-break. Current carrying parts of high-conductivity copper, with silver-tungsten type switch contacts. Provide NEMA 1 type enclosures indoors and NEMA 3R type enclosures with raintight hubs outdoors.

B. Provide General Duty Type: 240 volts AC, Type GD. Heavy Duty Type: 600 volts AC.

C. Switches used as motor disconnect means shall be horsepower rated. Fused switches shall utilize Class R fuseholder and fuses unless indicated otherwise or recommended by equipment manufacturer.

2.6 ELECTRICAL GROUNDING AND BONDING EQUIPMENT

A. General: UL 467. Provide grounding products of types indicated and of sizes and ratings as required by NEC. Provide all material required including but not necessarily limited to, cable/wire, connectors, terminals (solderless lugs), grounding rods/electrodes, bonding jumper braid and other items and accessories needed for a complete installation. Where more than one type meets indicated requirements, selection is installer's option. Where materials or components are not otherwise indicated, provide products complying with NEC, and established industry standards.

B. Electrical Grounding Conductors: Unless otherwise indicated, provide electrical grounding conductors for grounding connections matching power supply wiring materials except bare or green insulation and sized according to NEC. Equipment grounding conductors shall have green insulation. Solid conductors shall comply with ASTM B-3, stranded conductors with ASTM B-8.

C. Grounding Connectors: Provide listed and labeled grounding connectors for the required materials. Provide high-conductivity plated pressure connector units or exothermic welded connections.

2.7 COMBINATION MOTOR CONTROLLERS

A. General: Motor circuit protector; molded-case circuit-type breaker type with magnetic-only trip element calibrated to coordinate with the actual locked-rotor current of the connected motor and the controller overload relays. Provide breakers that are factory assembled with the controller, interlocked with unit cover or door, and arranged to disconnect the controller. Provide motor circuit-protectors with field-adjustable trip elements.

2.8 LIGHTING FIXTURES

A. Provide lighting fixtures of sizes, types, and ratings indicated in lighting fixture schedule

B. Wiring: Provide electrical wiring within fixture suitable for connecting to branch circuit.
a. NEC Type AF for 120 volt, minimum No. 18 AWG.
b. NEC Type SF_2 for 277 volt, minimum No. 18 AWG.

2.9 TIME CONTROLLED SWITCHES

D. Provide electrically operated time controlled maintained contact switches with 24_hour dials capable of periodically and automatically switching mechanically held or electrically held contactors ON and OFF. Select switches which permit selection of from 1 to 7 ON_OFF operations each day; with coil ratings of 120 volts, 60 Hz, and with DPDT switch. Provide flush mount enclosure, NEMA Type 1, with side hinged door and lock, mounting holes and knockouts. Provide timing switch with manual circuit by_pass switch, 10 hour reserve power, and separate grounding terminal. Finish enclosure with manufacturer's standard gray finish.

2.10 MOTION DETECTORS

A. Indoor Motion Detectors: Provide passive infrared motion sensor to operate lights on detection of occupancy, 120/277 volts, field adjustable.

B. Outdoor Motion Detectors: Passive infrared motion sensor in weatherproof enclosure with adjustable digital sensitivity and time delay and isolated SPDT relay contact. Provide unit suitable for operation at temperatures as low as -40F. Provide adjustable mounting bracket.

S. HOYT WILLIAMS PE, LLC
10714 ROCK ARBOR WAY
KNOXVILLE TN. 37922
423 914 5601
MECHANICAL ELECTRICAL & PLUMBING ENGINEERING
SHWILLIAMSPE@GMAIL.COM

COMMONWEALTH OF VIRGINIA
DANIEL W. GIBSON
Lic. No. 44271
5/17/24
PROFESSIONAL ENGINEER

04.04.24	95% REVIEW SET
05.17.24	BID/PERMIT PLAN SET

MOUNT RODGERS PLACE
BRISTOL, VIRGINIA
180 Bristol East Road - Bristol, Virginia 24201

ELECTRICAL SPECIFICATIONS

Date 04.04.24
Scale
Project Number
Sheet E-6.1

INSTALLATION
PART 3 - INSTALLATION

3.1 General

A. Verify final locations for rough_in with field measurements and with the requirements of the actual equipment to be connected.

B. Rough_in for owner furnished equipment to make equipment operate as intended, including providing miscellaneous wiring items.

C. Adjust operating mechanisms for free mechanical movement. Clean interior and exterior using manufacturer's approved methods and materials.

D. Touch-up scratched or marred surfaces to match original finish.

E. In general, perform cutting and patching as necessary. Exercise care where cutting, channeling, chasing or drilling floors, walls, partitions, ceilings or other surfaces for installation of electrical work.

F. Patch finished surfaces and building components using new materials specified for the original installation and experienced installers. Installers' qualifications refer to the materials and methods required for the surface and building components being patched.

3.2 CABLE, WIRE AND CONNECTORS

A. Provide insulated conductors installed in conduit, except where specifically indicated or specified otherwise or required by NEC to be installed otherwise. Provide insulated equipment grounding conductor in feeder and branch circuits, including lighting circuits. Grounding conductor shall be separate from electrical system neutral conductor.

B. Coordinate cable and wire installation with electrical raceway and equipment installation. Conductor sizes indicated are copper. Pull conductors together where more than one is being installed. Use pulling means and lubricant that will not damage conductor or raceway. Use splice and tap connectors which are compatible with conductor material, and only in accessible junction, pull or outlet boxes.

C. Tighten electrical connectors and terminals, including screws and bolts, in accordance with manufacturer's published torque tightening values. Where manufacturer's torquing requirements are not indicated, tighten connectors and terminals to comply with tightening torques specified in UL 486A.

3.2 ELECTRICAL RACEWAYS

A. Provide with complete electrical raceway system before installing conductors within raceways. Provide support as required by NEC but within 1 foot of a change in direction or connection to an enclosure, cover ends of empty conduit to prevent entry of debris during rough-in, provide bonding type locknuts at boxes. Conceal conduit, unless indicated otherwise within finished walls, ceilings and floors. Run exposed conduits parallel or perpendicular to the building structure, close to the ceiling or beams. Keep raceways at least 6 inches away from parallel runs of flues, steam, and hot water pipes.

B. Use the following wiring methods:
   a. Outdoors:
   i. Intermediate metal conduit
   ii. Rigid metal conduit
   iii. Liquid-tight flexible metal conduit
   b. Indoors:
   i. Electrical metallic tubing
   ii. Flexible metal conduit
   iii. Rigid metal conduit (where exposed and subject to damage)

C. Use raceway fittings that are of types compatible with the associated raceway and suitable for the use and location. For intermediate steel conduit, use threaded rigid steel conduit fittings except as otherwise indicated.

D. Run exposed, parallel, or banked raceways together. Make bends in parallel or banked runs from the same center line so that the bends are parallel. Factory elbows may be used in banked runs only where they can be installed parallel. This requires that there be a change in the plane of the run such as from wall to ceiling and that the raceways be of the same size. In other cases provide field bends for parallel raceways.

E. Install pull wires in empty raceways. Use No. 14 AWG zinc-coated steel or monofilament plastic line having not less than 200-lb. tensile strength. Leave not less than 12 inches of slack at each end of the pull wire.

F. Flexible Connections: Use short length (maximum of 6 ft.) of flexible conduit for recessed and semirecessed lighting fixtures, for equipment subject to vibration, noise transmission, or movement; and for all motors. Use liquid-tight flexible conduit in wet locations. Install separate ground conductor across flexible connections.

G. Surface Metal Raceway: Install to walls, cabinets, and ceilings as recommended by equipment manufacturer with fasteners suitable for the material to which the surface metal raceway is being attached. Install a separate green ground conductor in raceway from the junction box supplying the raceway to receptacle or fixture ground terminals. Provide as an integral part or install wiring devices as indicated. Make cuts and other modifications with factory cuts and other modifications with factory furnished tools specifically designed for the purpose.

3.3 ELECTRICAL BOXES AND FITTINGS

A. Provide weatherproof outlet boxes for interior and exterior locations exposed to moisture, flush mounted boxes for connection to concealed conduit and pull boxes as required for installation of conductors. Sizes shall be adequate to meet NEC volume requirements, but not smaller than sizes indicated. Remove knockouts only as required and plug unused openings.

B. Fasten boxes rigidly to substrate or structural surfaces to which they are to be mounted, or solidly embed electrical boxes in concrete or masonry.

3.4 WIRING DEVICES

A. Install wiring devices in clean outlets after wiring has been installed. Do not install plates and cover installed wiring devices until painting is complete.

B. Ground all wiring devices unless indicated otherwise. Test wiring devices for correct polarity, proper ground and electrical continuity.

C. Install covers and device plates with edges in continuous contact with finished wall surfaces without use of mats or similar devices. Plaster or caulking used as a filling to repair openings around outlets shall not be applied without removing the cover or device plate. Plates installed in wet areas shall be gasketed.

3.5 SAFETY AND DISCONNECT SWITCHES

A. Install disconnect switches used for motor-driven equipment within sight of the controller and motor and not more than 50 feet from the controller and motor unless indicated otherwise.

B. Provide an electrical ground for all disconnect switches.
C. Test all switches for proper operation by operating them energized, but without load for six opening/closing cycles. Inspect switch and correct deficiencies, then retest to demonstrate compliance.

3.6 ELECTRICAL GROUNDING EQUIPMENT

A. Install electrical grounding systems where shown, in accordance with applicable portions of National Electrical Code, **NECA 331-2014 "Standard for Building and Service Entrance Grounding and Bonding,"** and in accordance with recognized industry practices to ensure that products comply with requirements and serve intended functions.

B. Provide separate grounding conductor with wiring in all raceways.

C. Provide grounding electrode conductor and connect to reinforcing steel in foundation footing where indicated.

D. Install clamp-on connectors only on thoroughly cleaned metal contact surfaces, to ensure electrical conductivity and circuit integrity.

3.7 LIGHTING FIXTURES

A. General: Install lighting fixtures of types indicated, where shown and at indicated heights, in accordance with lighting fixture manufacturer's written instructions and with recognized industry practices. Comply with NEMA standards and requirements of National Electrical Code pertaining to installation of lighting fixtures and with applicable portions of NECA's "Standards of Installation".

B. Fasten surfaced LED fixtures to suspended ceiling system near corner of each unit. Bolt fixture to main ceiling supports with stud_clips minimum 1/2_20. Support fixtures weighing in excess of 56 pounds directly from the building structure. Recessed and semi_recessed fixtures may be supported from suspended ceiling support system ceiling tees if the ceiling system support wires are provided at a minimum of four wires per fixture and located not more than 6 inches from each corner of each fixture. In addition, provide support clips securely fastened to ceiling grid members at or near corner of each recessed fixture.

C. Secure pendant mounted LED fixtures via outlet box directly to building structure with approved bolting and clamps. Provide each stem or hanger with an approved swivel joint to ensure a continued plumb installation.

D. Mounting heights indicated are to bottom of ceiling_mounted fixtures and to center of wall mounted fixtures.

E. Install all exit lights lighting units plumb, square and level with walls and ceilings and secure in accordance with manufacturer's written instructions Mounting heights shall be to bottom of unit.

F. Clean lighting fixtures of dirt and debris upon completion of installation. Protect installed fixtures from damage during remainder of construction period.

G. Do not install interior fixture lens until construction is complete or protect lens from accumulation of dust and debris.

H. Adjust all fixtures with adjustable aiming to meet the Architect/Engineer's approval.

I. Test all lighting fixtures for compliance with intended purpose. Correct malfunctioning or noisy units, then retest to demonstrate compliance.

J. At date of substantial completion, replace all lamps which are observed to be noticeably dimmed as judged by the Architect/Engineer.

K. Provide tight equipment grounding connections to comply with tightening torques specified in UL 486A for each lighting fixture.

S. HOYT WILLIAMS PE, LLC
10714 ROCK ARBOR WAY
KNOXVILLE TN, 37922
423 914 5601
MECHANICAL ELECTRICAL &
PLUMBING ENGINEERING
SHWILLIAMSPE@GMAIL.COM

COMMONWEALTH OF VIRGINIA
DANIEL W. GIBSON
Lic. No. 44271
5/17/24
PROFESSIONAL ENGINEER

04.04.24	95% REVIEW SET	
05.17.24	BID/PERMIT PLAN SET	

MOUNT RODGERS PLACE
BRISTOL, VIRGINIA
180 Bristol East Road - Bristol, Virginia 24201

ELECTRICAL SPECIFICATIONS

Date 04.04.24
Scale
Project Number
Sheet
E-6.2

ADDRESSABLE FIRE-ALARM SYSTEMS

PART 1 - GENERAL

1.1 RELATED DOCUMENTS

A. Drawings and general provisions of the Contract, including General and Supplementary Conditions and Division 01 Specification Sections, apply to this Section.

1.2 SUMMARY

A. Section Includes:
1. Addressable fire-alarm system.
2. Fire-alarm control panel (FACP).
3. Manual fire-alarm boxes.
4. System smoke detectors.
5. Heat detectors.
6. Fire-alarm notification appliances.
7. Fire-alarm addressable interface devices.

1.3 DEFINITIONS

A. FACP: Fire-alarm control panel.

B. Mode: The terms "Active Mode," "Off Mode," and "Standby Mode" are used as defined in the 2007 Energy Independence and Security Act (EISA).

C. NICET: National Institute for Certification in Engineering Technologies.

D. PC: Personal computer.

E. Voltage Class: For specified circuits and equipment, voltage classes are defined as follows:
1. Control Voltage: Listed and labeled for use in remote-control, signaling, and power-limited circuits supplied by a Class 2 or Class 3 power supply having rated output not greater than 150 V and 5 A, allowing use of alternate wiring methods complying with NFPA 70, Article 725.
2. Low Voltage: Listed and labeled for use in circuits supplied by a Class 1 or other power supply having rated output not greater than 1000 V, requiring use of wiring methods complying with NFPA 70, Article 300, Part I.

1.4 ACTION SUBMITTALS

A. Approved Permit Submittal: Submittals must be approved by authorities having jurisdiction prior to submitting them to Architect.

B. Product Data: For each type of product, including furnished options and accessories.
1. Include construction details, material descriptions, dimensions, profiles, and finishes.
2. Include rated capacities, operating characteristics, and electrical characteristics.

C. Shop Drawings: For fire-alarm system.
1. Comply with recommendations and requirements in "Documentation" section of "Fundamentals" chapter in NFPA 72.
2. Include plans, elevations, sections, and details, including details of attachments to other Work.
3. Include details of equipment assemblies. Indicate dimensions, weights, loads, required clearances, method of field assembly, components, and locations. Indicate conductor sizes, indicate termination locations and requirements, and distinguish between factory and field wiring.
4. Annunciator panel details as required by authorities having jurisdiction.
5. Detail assembly and support requirements.
6. Include voltage drop calculations for notification-appliance circuits.
7. Include battery-size calculations.
8. Include input/output matrix.
9. Include written statement from manufacturer that equipment and components have been tested as a system and comply with requirements in this Section and in NFPA 72.
10. Include performance parameters and installation details for each detector.
11. Verify that each duct detector is listed for complete range of air velocity, temperature, and humidity possible when air-handling system is operating.
12. Provide control wiring diagrams for fire-alarm interface to HVAC; coordinate location of duct smoke detectors and access to them.
    a. Show field wiring and equipment required for HVAC unit shutdown on alarm.
    b. Locate detectors in accordance with manufacturer's written instructions.
13. Include floor plans to indicate final outlet locations showing address of each addressable device. Show size and route of cable and conduits and point-to-point wiring diagrams.

1.5 CLOSEOUT SUBMITTALS

A. Operation and Maintenance Data: For fire-alarm systems and components to include in emergency, operation, and maintenance manuals.
1. In addition to items specified in Section 017700 "Closeout Procedures," include the following:
    a. Comply with "Records" section of "Inspection, Testing and Maintenance" chapter in NFPA 72.
    b. Provide "Fire-Alarm and Emergency Communications System Record of Completion Documents" in accordance with "Completion Documents" Article in "Documentation" section of "Fundamentals" chapter in NFPA 72.
    c. Complete wiring diagrams showing connections between devices and equipment. Each conductor must be numbered at every junction point with indication of origination and termination points.
    d. Riser diagram.
    e. Device addresses.
    f. Record copy of site-specific software.
    g. Provide "Inspection and Testing Form" in accordance with "Inspection, Testing and Maintenance" chapter in NFPA 72, and include the following:
        1) Equipment tested.
        2) Frequency of testing of installed components.
        3) Frequency of inspection of installed components.
        4) Requirements and recommendations related to results of maintenance.
        5) Manufacturer's user training manuals.
    h. Manufacturer's required maintenance related to system warranty requirements.
    i. Abbreviated operating instructions for mounting at FACP and each annunciator unit.

B. Software and Firmware Operational Documentation:
1. Software operating and upgrade manuals.
2. Program Software Backup: On USB media and approved online or cloud solution.
3. Device address list.

1.6 QUALITY ASSURANCE

A. Installer Qualifications:
1. Personnel must be trained and certified by manufacturer for installation of units required for this Project.
2. Installation must be by personnel certified by NICET as fire-alarm Level II technician.
3. Obtain certification by NRTL in accordance with NFPA 72.

PART 2 - PRODUCTS

2.1 ADDRESSABLE FIRE-ALARM SYSTEM

A. Description:
1. Addressable system, with horn-and-strobe notification for evacuation.

B. Performance Criteria:
1. Regulatory Requirements:
    a. Fire-Alarm Components, Devices, and Accessories: Listed and labeled by a NRTL in accordance with NFPA 70 for use with selected fire-alarm system and marked for intended location and application.
2. General Characteristics:
    a. Automatic sensitivity control of certain smoke detectors.
    b. Fire-alarm signal initiation must be by one or more of the following devices and systems:
        1) Manual stations.
        2) Heat detectors.
        3) Smoke detectors.
    c. Fire-alarm signal must initiate the following actions:
        1) Continuously operate alarm notification appliances, including voice evacuation notices.
        2) Identify alarm and specific initiating device at FACP and remote annunciators.
        3) Transmit alarm signal to remote alarm receiving station.
        4) Record events in system memory.

2.2 FIRE-ALARM CONTROL PANEL (FACP)

A. Description: Field-programmable, microprocessor-based, modular, power-limited design with electronic modules.

B. Performance Criteria:
1. Regulatory Requirements: Comply with NFPA 72 and UL 864.
2. General Characteristics:
    a. Include real-time clock for time annotation of events on event recorder.
    b. Provide communication between FACP and remote circuit interface panels, annunciators, and displays.
    c. FACP must be listed for connection to central-station signaling system service.
    d. Provide nonvolatile memory for system database, logic, and operating system and event history. System must require no manual input to initialize in the event of complete power down condition. FACP must provide minimum 500-event history log.
    e. Addressable Initiation Device Circuits: FACP must indicate which communication zones have been silenced and must provide selective silencing of alarm notification appliance by building communication zone.
        1) Addressable Control Circuits for Operation of Notification Appliances and Mechanical Equipment: FACP must be listed for releasing service.
    f. Alphanumeric Display and System Controls: Arranged for interface between human operator at FACP and addressable system components including annunciation and supervision. Display alarm, supervisory, and component status messages and programming and control menu.
        1) Keypad: Arranged to permit entry and execution of programming, display, and control commands and to indicate control commands to be entered into system for control of smoke-detector sensitivity and other parameters.
    g. Initiating-Device, Notification-Appliance, and Signaling-Line Circuits:
        1) Pathway Class Designations: NFPA 72, Class B.
        2) Install fault circuit isolators to comply with circuit performance requirements of NFPA 72 or with manufacturer's written instructions, whichever is more conservative.
    h. Smoke-Alarm Verification:
        1) Initiate audible and visible indication of "alarm-verification" signal at FACP.
        2) Activate approved "alarm-verification" sequence at FACP and detector.
        3) Sound general alarm if alarm is verified.
        4) Cancel FACP indication and system reset if alarm is not verified.
    i. Notification-Appliance Circuit:
        1) Audible appliances must sound in three-pulse temporal pattern, as defined in NFPA 72.
        2) Where notification appliances provide signals to sleeping areas, alarm signal must be 520 Hz square wave with intensity 15 dB above average ambient sound level or 5 dB above maximum sound level, or at least 75 dB(A-weighted), whichever is greater, measured at pillow.
        3) Visual alarm appliances must flash in synchronization where multiple appliances are in same field of view, as defined in NFPA 72.
    j. Transmission to Remote Alarm Receiving Station: Automatically transmit alarm, supervisory, and trouble signals to remote alarm station.
    k. Preamplifiers, amplifiers, and tone generators must automatically transfer to backup units, on primary equipment failure.
    l. Printout of Events: On receipt of signal, print alarm, supervisory, and trouble events. Identify zone, device, and function. Include type of signal (alarm, supervisory, or trouble) and date and time of occurrence. Differentiate alarm signals from other printed indications. Also, print system reset event, including same information for device, location, date, and time. Commands initiate printing of list of existing alarm, supervisory, and trouble conditions in system and historical log of events.
    m. Primary Power: 24 V(dc) obtained from 120 V(ac) service and power-supply module. Initiating devices, notification appliances, signaling lines, trouble signals, and supervisory signals must be powered by 24 V(dc) source.
    n. Alarm current draw of entire fire-alarm system must not exceed 80 percent of power-supply module rating.
    o. Secondary Power: 24 V(dc) supply system with batteries, automatic battery charger, and automatic transfer switch.
    p. Batteries: Sealed lead calcium.

C. Accessories:
1. Instructions: Computer printout or typewritten instruction card mounted behind plastic or glass cover in stainless steel or aluminum frame. Include interpretation and describe appropriate response for displays and signals. Briefly describe functional operation of system under normal, alarm, and trouble conditions.

2.3 MANUAL FIRE-ALARM BOXES

A. General Requirements for Manual Fire-Alarm Boxes: Comply with UL 38. Boxes must be finished in red with molded, raised-letter operating instructions in contrasting color; must show visible indication of operation; and must be mounted on recessed outlet box. If indicated as surface mounted, provide manufacturer's surface back box.
1. Double-action mechanism requiring two actions to initiate alarm, breaking-glass or plastic-rod type; with integral addressable module arranged to communicate manual-station status (normal, alarm, or trouble) to FACP.
2. Station Reset: Key- or wrench-operated switch.
3. Indoor Protective Shield: Factory-fabricated, clear plastic enclosure hinged at top to permit lifting for access to initiate alarm. Lifting cover actuates integral battery-powered audible horn intended to discourage false-alarm operation.
4. Weatherproof Protective Shield: Factory-fabricated, clear plastic enclosure hinged at top to permit lifting for access to initiate alarm.

2.4 SYSTEM SMOKE DETECTORS

A. Photoelectric Smoke Detectors:
1. Performance Criteria:
    a. Regulatory Requirements:
        1) NFPA 72.
        2) UL 268.
    b. General Characteristics:
        1) Integral Addressable Module: Arranged to communicate detector status (normal, alarm, or trouble) to FACP.
        2) Base Mounting: Detector and associated electronic components must be mounted in twist-lock module that connects to fixed base. Provide terminals in fixed base for connection to building wiring.
        3) Self-Restoring: Detectors do not require resetting or readjustment after actuation to restore them to normal operation.
        4) Integral Visual-Indicating Light: LED type, indicating detector has operated and power-on status.
        5) Color: White.

2.5 HEAT DETECTORS

A. Combination-Type Heat Detectors:
1. Performance Criteria:
    a. Regulatory Requirements:
        1) NFPA 72. UL 521.
    b. General Characteristics:
        1) Temperature sensors must test for and communicate sensitivity range of device.
    c. Actuated by fixed temperature of 135 deg F or rate of rise that exceeds 15 deg F per minute unless otherwise indicated.
    d. Color: White.

2.6 FIRE-ALARM NOTIFICATION APPLIANCES

A. Fire-Alarm Audible Notification Appliances:
1. Description: Horns, bells, or other notification devices that cannot output voice messages.
2. Performance Criteria:
    a. Regulatory Requirements:
        1) NFPA 72.
    b. General Characteristics:
        1) Individually addressed, connected to signaling-line circuit, equipped for mounting as indicated, and with screw terminals for system connections.
        2) Connected to notification-appliance signal circuits, zoned as indicated, equipped for mounting as indicated, and with screw terminals for system connections.
        3) Horns: Electric-vibrating-polarized type, 24 V(dc); with provision for housing operating mechanism behind grille. Comply with UL 464. Horns must produce sound-pressure level of 90 dB(A-weighted), measured 10 ft. from horn, using coded signal prescribed in UL 464 test protocol.
        4) Combination Devices: Factory-integrated audible and visible devices in single-mounting assembly, equipped for mounting as indicated, and with screw terminals for system connections.

B. Fire-Alarm Visible Notification Appliances:
1. Performance Criteria:
    a. Regulatory Requirements:
        1) NFPA 72. UL 1971.
    b. General Characteristics:
        1) Rated Light Output:
            a) 15/30/75/110 cd, selectable in field.
        2) Clear or nominal white polycarbonate lens mounted on aluminum faceplate.
        3) Mounting: Wall mounted unless otherwise indicated.
        4) For units with guards to prevent physical damage, light output ratings must be determined with guards in place.
        5) Flashing must be in temporal pattern, synchronized with other units.
        6) Strobe Leads: Factory connected to screw terminals.
        7) Mounting Faceplate: Factory finished, white.

PART 3 - EXECUTION

3.1 EXAMINATION

A. Examine areas and conditions for compliance with requirements for ventilation, temperature, humidity, and other conditions affecting performance of the Work.
1. Verify that manufacturer's written instructions for environmental conditions have been permanently established in spaces where equipment and wiring are installed, before installation begins.

B. Examine roughing-in for electrical connections to verify actual locations of connections before installation.

C. Proceed with installation only after unsatisfactory conditions have been corrected.

3.2 INSTALLATION OF EQUIPMENT

A. Comply with NECA 305, NFPA 72, NFPA 101, and requirements of authorities having jurisdiction for installation and testing of fire-alarm equipment. Install electrical wiring to comply with requirements in NFPA 70 including, but not limited to, Article 760, "Fire Alarm Systems."
1. Devices placed in service before other trades have completed cleanup must be replaced.
2. Devices installed, but not yet placed, in service must be protected from construction dust, debris, dirt, moisture, and damage in accordance with manufacturer's written storage instructions.

B. Install wall-mounted equipment, with tops of cabinets not more than 78 inch above finished floor.

C. Manual Fire-Alarm Boxes:
1. Install manual fire-alarm box in normal path of egress within 60 inch of exit doorway.
2. Mount manual fire-alarm box on background of contrasting color.
3. Operable part of manual fire-alarm box must be between 42 and 48 inch above floor level. Devices must be mounted at same height unless otherwise indicated.

D. Smoke- and Heat-Detector Spacing:
1. Comply with "Smoke-Sensing Fire Detectors" section in "Initiating Devices" chapter in NFPA 72, for smoke-detector spacing.
2. Comply with "Heat-Sensing Fire Detectors" section in "Initiating Devices" chapter in NFPA 72, for heat-detector spacing.
3. Smooth ceiling spacing must not exceed 30 ft.
4. Spacing of detectors for irregular areas, for irregular ceiling construction, and for high ceiling areas must be determined in accordance with Annex A or Annex B in NFPA 72.
5. HVAC: Locate detectors not closer than 36 inch from air-supply diffuser or return-air opening.
6. Lighting Fixtures: Locate detectors not closer than 12 inch from lighting fixture and not directly above pendant mounted or indirect lighting.

E. Install cover on each smoke detector that is not placed in service during construction. Cover must remain in place except during system testing. Remove cover prior to system turnover.

F. Audible Alarm-Indicating Devices: Install not less than 6 inch below ceiling. Install bells and horns on flush-mounted back boxes with device-operating mechanism concealed behind grille. Install devices at same height unless otherwise indicated.

G. Visible Alarm-Indicating Devices: Install not less than 6 inch below ceiling. Install devices at same height unless otherwise indicated.

3.3 FIELD QUALITY CONTROL

A. Administrant for Tests and Inspections:
1. Engage qualified testing agency to administer and perform tests and inspections.

B. Tests and Inspections:
1. Visual Inspection: Conduct visual inspection prior to testing.
    a. Inspection must be based on completed record Drawings and system documentation that is required by "Completion Documents, Preparation" table in "Documentation" section of "Fundamentals" chapter in NFPA 72.
    b. Comply with "Visual Inspection Frequencies" table in "Inspection" section of "Inspection, Testing and Maintenance" chapter in NFPA 72; retain "Initial/Reacceptance" column and list only installed components.
2. System Testing: Comply with "Test Methods" table in "Testing" section of "Inspection, Testing and Maintenance" chapter in NFPA 72.

C. Fire-alarm system will be considered defective if it does not pass tests and inspections.

D. Prepare test and inspection reports.

E. Annual Test and Inspection: One year after date of Substantial Completion, test fire-alarm system complying with visual and testing inspection requirements in NFPA 72. Use forms developed for initial tests and inspections.

3.4 DEMONSTRATION

A. Train Owner's maintenance personnel to adjust, operate, and maintain fire-alarm system.

3.5 MAINTENANCE

A. Maintenance Service: Beginning at Substantial Completion, maintenance service must include 12 months' full maintenance by skilled employees of manufacturer's designated service organization. Include preventive maintenance, repair or replacement of worn or defective components, lubrication, cleaning, and adjusting as required for proper operation. Parts and supplies must be manufacturer's authorized replacement parts and supplies.
1. Include visual inspections in accordance with "Visual Inspection Frequencies" table in "Testing" paragraph of "Inspection, Testing and Maintenance" chapter in NFPA 72.
2. Perform tests in "Test Methods" table in "Testing" paragraph of "Inspection, Testing and Maintenance" chapter in NFPA 72.
3. Perform tests per "Testing Frequencies" table in "Testing" paragraph of "Inspection, Testing and Maintenance" chapter in NFPA 72. END OF SECTION

S. HOYT WILLIAMS PE, LLC
10714 ROCK ARBOR WAY
KNOXVILLE TN. 37922
423 914 5601
MECHANICAL ELECTRICAL & PLUMBING ENGINEERING
SHWILLIAMSPE@GMAIL.COM

COMMONWEALTH OF VIRGINIA
DANIEL W. GIBSON
Lic. No. 44271
5/17/24
PROFESSIONAL ENGINEER

04.04.24	95% REVIEW SET
05.17.24	BID/PERMIT PLAN SET

MOUNT RODGERS PLACE
BRISTOL, VIRGINIA
180 Bristol East Road - Bristol, Virginia 24201

ELECTRICAL SPECIFICATIONS

Date 04.04.24
Scale
Project Number
Sheet
E-6.3